УДК 683.9:621.7

K. A. OZHIKENOV, R. M. UTEBAYEV, ZH. M. BAIMBETOVA

(Kazakh national technical university after K. I. Satpayev, Almaty, Kazakhstan)

MODELING THE TEMPERATURE CONTROL SYSTEM OF HEATER IN COMPOSITE MATERIAL

Annotation. The method of modeling temperature control system of heater by means of composite material through ISIS program is considered. Modeling examples and its laboratory analogues are given. Modeling and heater temperature control programs, the results of laboratory works are explained.

Keywords: composite material, temperature, heater, microcontroller, driver, soldering iron.

Тірек сөздер: композиттік материал, температура, қыздырғыш, микроконтроллер, драйвер, дәнекерлегіш.

Ключевые слова: композитный материал, температура, нагреватель, микроконтроллер, драйвер, паяльник.

Nowadays the composite materials are in general use all over the world. By means of composite materials technology reached significant easements and changes. Composite material, as also, composition material or composite – is a handicraft non-homogenuos solid material, in ultimate structure it consists of one or several components that don't aggregate in macroscopic level, and have different chemical and physical features.

The mechanical direction of composite is determined by the ratio of element and matrix features and stability of their interrelation. The efficiency and operation capacity of material depends on the right selection of initial components and integral usage technology providing durable interrelation between components to keep their initial features.

Composite materials are widely used and they are also applied for soldering irons. In recent years these soldering irons are in big demand. The first soldering irons are extensively used in USA, Japan, Russia [1].

The difference of these soldering irons from the irons that were in application before – they meet modern requirements, they are energy-efficient, work on the battery and wireless [2].

This work shows the modeling of temperature control system of heater by means of soldering irons made of composite materials (Figure 1). Through this program microcontroller can perform the task properly. The usage of microdiagrams with microcontrollers allows getting the appropriate heater temperature and functional scheme.

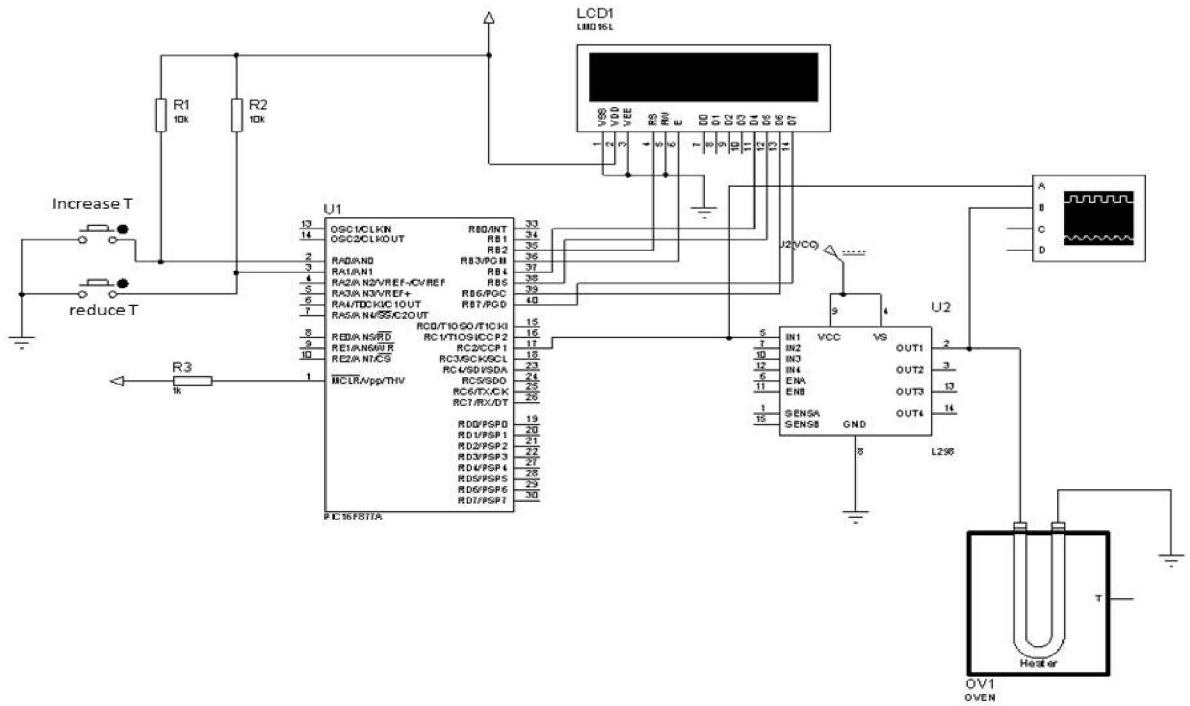

Figure 1 – The principal scheme for temperature control of heater in composite materials

To manage the microcontroller of the temperature of heater in composite material there is a special program in Proton IDE language, composed by means of Basic Compiler:

```
Device = 16F877A; Applied microcontroller
Xtal = 4 ; Oscillator frequency 4 MHz
;----------- LCD setup -------------------------
Declare LCD_Type ALPHA ; LCD type - alphanumeric
Declare LCD_DTPin PORTB.4 ; LCD pert information
Declare LCD_ENPin PORTB.3 ; E line management
Declare LCD_RSPin PORTB.2 ; RS line management
Declare LCD_Interface 4 ; Data line assignment
Declare LCD_CommandUs 2000 ; Holdback before sending a command
Declare LCD_DataUs 50 ; Holdback before sending an information
Declare LCD_Lines 4 ; The number of LCD lines
;------------------------- Port adjustment-------------------------
'Declare PORTB_PULLUPS = OFF ; Switching off pull up resistors in PORTB
Declare All_Digital = On ; Set all ports for digital input/output
;----------------- Specially assigned registers-----------------
 TRISA = %00000011          ' RA0,RA1 input, RA2...RA5 output
 TRISC = %00000000 ' RC2 output CHIM
;------------------------------- Exchange promotion ---------------------------
Dim Tout As Byte
Dim T_ As Float
Symbol SB1 = PORTA.0
Symbol SB2 = PORTA.1
Dim N As Byte
'------------------------------Initialization---------------------------------------
init:
Tout = 0
```

```
;------------------------ Main program-----------------------
main:
'cls
'HT' 1, Tout, 2000
T_ = Tout / 2.55
Print At 1, 1, "t", Dec3 Tout
Print At 2, 1, "tout=", Dec1 T_ , "%"
If SB1 = 0 Then DelayMS 100: N = N + 1
If N >= 254 Then N = 254
If SB2 = 0 Then DelayMS 100: N = N - 1: If N = 255 Then N = 0
Tout = N
DelayMS 50
GoTo main
 End
```

In Mecanique company the application of Proton IDE language program shows efficient performance in high speed operation of programs and simplicity of interface.

For diagrams with microcontrollers the most appropriate modeling field is ISIS (Intelligent Schematic Input System) of Proteus system [3]. The principal scheme shown in image 1 was made in ISIS field. For integral mathematic analysis of analogous scheme, the appropriate program is Matlab [4].

The prototype (figure 1) shows the microcontroller PIC16F877A of MicroChip company [5]. The scheme excludes the stroke frequency resonator, because the program determines the type of tools for obtainig the stroke frequency in modeling field. L298 scheme is the driver of direct current motor and it ensures the motor movement, its force doesn't exceed 30W. The block diagram of L298 microscheme offered by the production plant is shown in figure 2. L298 driver consists of PowerSO20 system and total integral closed in 15-lead MULTIWATT. It works on high intensifier, big current. It has two inputs consisting of switching on and off devices. To connect the sensitive surface of resistor the appropriate terminal surface can be used and any bridge irradiating beams in bottom transistor interconnects. The operation of logic in low intensifier requires additional input source [6].

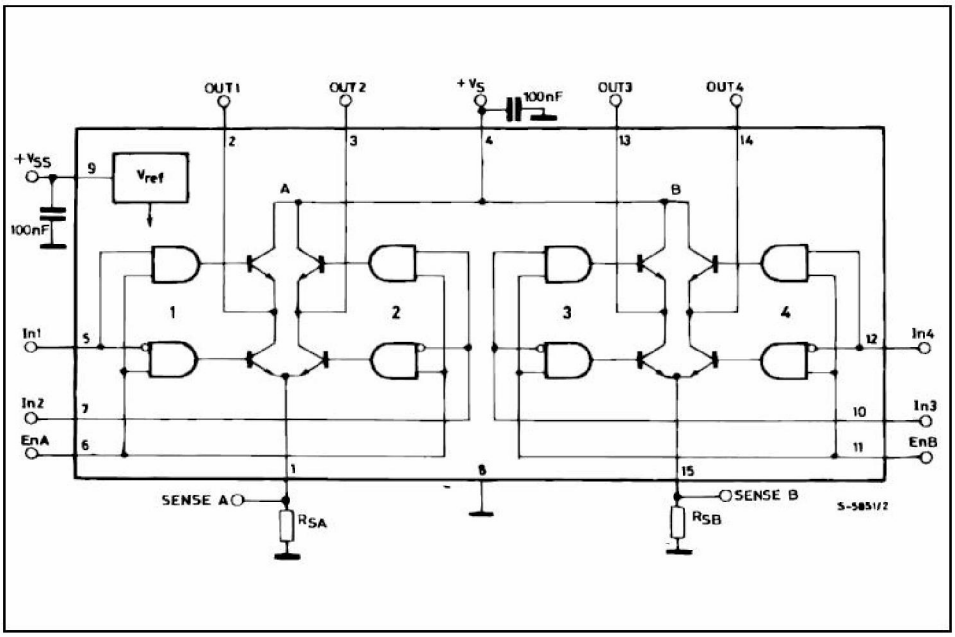

Figure 2 – Block diagram of L298 driver' microscheme

Besides, during the modeling through temperature control system of heater in composite material we can determine the temperature through heater. Heater model in operation is presented in figure 3.

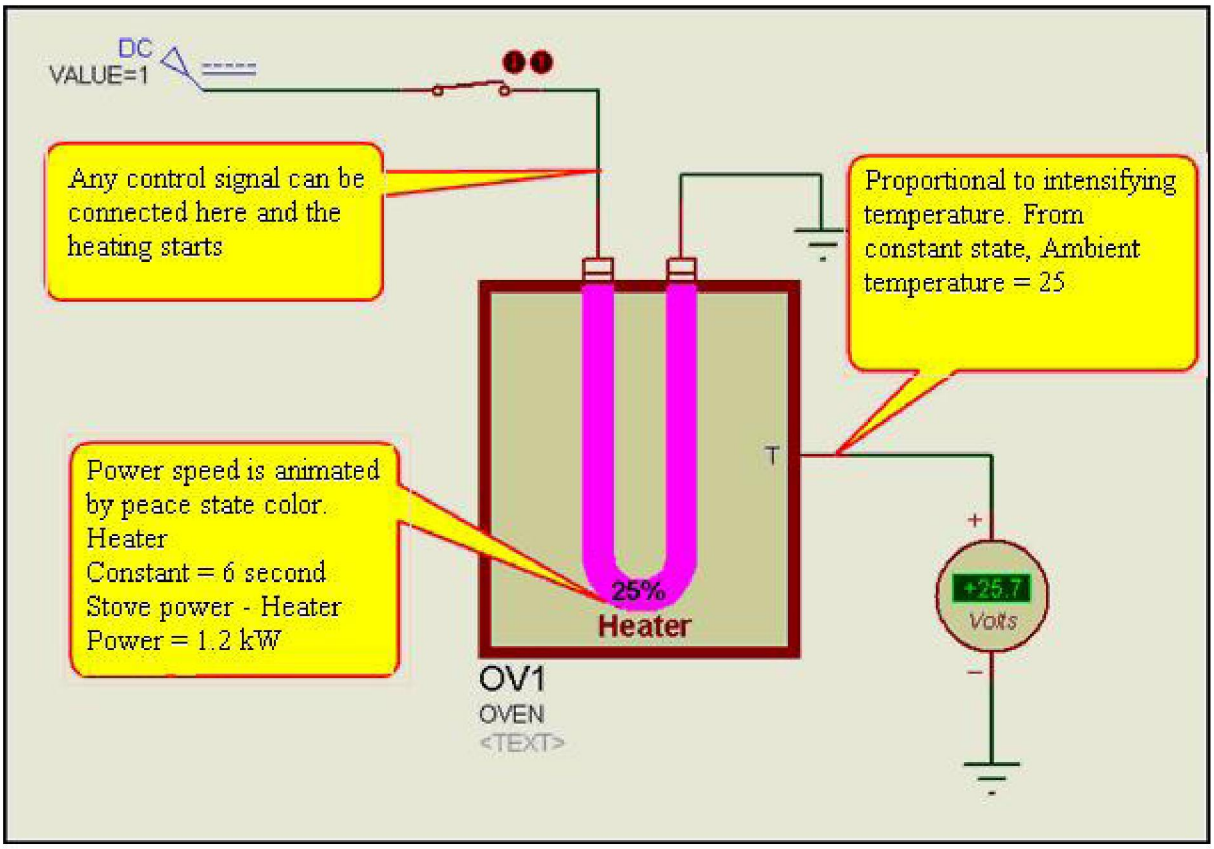

Figure 3 – Heater model in operation process

With PIC microcontroller different control schemes can be arranged as per the system requirements [7]. Microcontroller contains two independent outputs of pulse length modulator (PLM), correspondingly, CCP1 and CCP2 in RC2 and RC1 ports. With PLM two or more drivers can be managed. For example, in Proton IDE HPWM 1, VAR1, 1000 are the functional commands for PLM control. 1 signal here determines the output port, VAR1 determines the solidity ratio and 1000 – PLM frequency.

All the input and output ports of microcontroller can be used for RC, RB and RA feedback sensors or to input the control signal.

It stands to mention that the microcontroller can be managed through COM port with the help of computer, in most cases special MAX232 microscheme is used for it. The laboratory model of actuator control system is shown in figure 4.

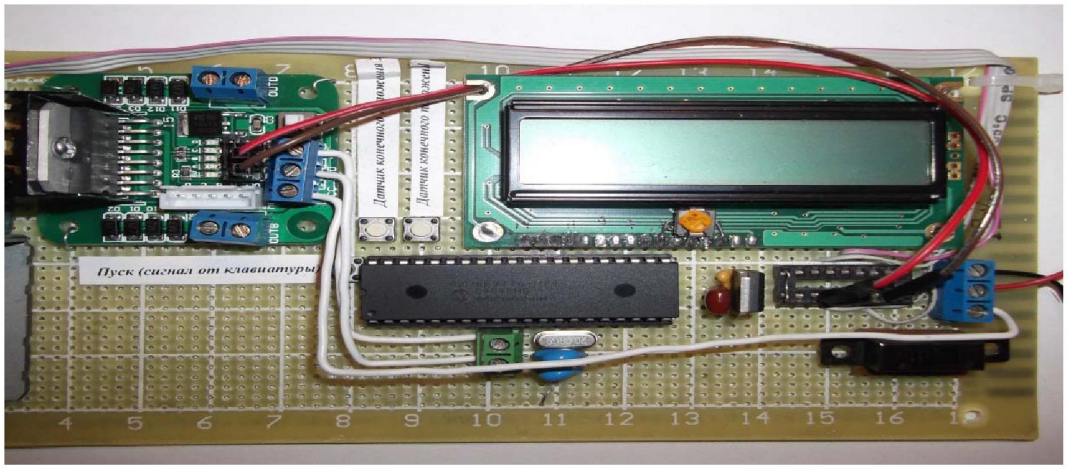

Figure 4 – The laboratory model of actuator control system

Concluding, modeling and drafting results have shown the possibility of simplification of heater temperature control scheme in composite materials with the help of complex modeling methods. The use of microcontroller lets update the previous heater temperature control system. The proposed drafting method lets develop and study a new control scheme and solve the heater temperature control issue with the help of composite material.

REFERENCES

1 Wikipedia COMFIBER under Creative Commons Attribution-NonCommercial-SnareAlike 3.0.
2 www.finestreet.ru Alexander Lyubimtsev. HAKKO Corporation soldering stations.
3 Maksimov A. Modeling device with microcontrollers using the ISIS program from Protues VSMю Radio. 2005. № 4. P. 30.
4 Dyakonov V.P. MatLab 6.5. SP1/7+Simulink 5/6 in mathematics and modeling. M.: SOLON-Press, 2005.
5 Predko M. Reference for Pic-microcontrolers. Translation from English. M DMK Press, 2002.
6 www.st.com 2000 ST Microelectronics – Printed in Italy. ALL Rights Reserved.
7 SGS – Tomson Microelecrtonics datasheets/www. datasheets.com.

Резюме

Қ. А. ӨЖІКЕНОВ, Р. М. ӨТЕБАЕВ, Ж. М. БАЙЫМБЕТОВА

(Қ. И. Сәтбаев атындағы Қазақ ұлттық техникалық университеті, Алматы, Қазақстан)

КОМПОЗИТТІК МАТЕРИАЛДАҒЫ ҚЫЗДЫРҒЫШТЫҢ ТЕМПЕРАТУРАСЫН БАСҚАРАТЫН ЖҮЙЕНІ МОДЕЛЬДЕУ

Жұмыста қазіргі таңда инженерлердің жұмысын жеңілдету мен мемлекетіміздің экономикалық, техникалық жағдайын жақсарту барысындағы өзекті мәселелердің бірі болып табылатын композиттік материалдың көмегімен қыздырғыштың температурасын сымсыз батареямен басқару мәселесі қарастырылған. Төменгі температура кезінде литий-ионды батареяларды қыздыру үшін композиттік материалды қолданудың жаңа тәсілдері ұсынылды. Басқару алгоритмі ISIS бағдарламасындағы Proton IDE тілінде жазылған бағдарламамен жүзеге асырылып, Proteus бағдарламасына негізделіп жасалған микроконтроллер арқылы модельдеу жүргізілген. Модельдеу нәтижесін қолдана отырып, көптеген тәжірибелік жұмыстар жүргізіліп, қыздырғыштың температурасын литий-ионды батареялармен басқару мүмкіндігі пайда болды.

Тірек сөздер: композиттік материал, температура, қыздырғыш, микроконтроллер, драйвер, дәнекерлегіш.

Резюме

К. А. Ожикенов, Р. М. Утебаев, Ж. М. Байымбетова

(Казахский национальный технический университет им. К. И. Сатпаева, Алматы, Казахстан)

МОДЕЛИРОВАНИЕ СИСТЕМЫ УПРАВЛЕНИЯ ТЕМПЕРАТУРОЙ НАГРЕВАТЕЛЯ НА КОМПОЗИТНОМ МАТЕРИАЛЕ

В работе рассмотрен вопрос управления нагревателя температурой без провода с батареями с помощью композитного материала для облегчения работы инженера. При низкой температуре предложили новые приемы композитных материалов для нагревателя литий-ионных батареях. Алгоритм управления осуществлен на языке Proton IDE основанная на язык программирования ISIS, а моделирования проведено с помощью программирования Proteus основанная на микроконтроллерах. Применяя результаты моделирования, появляется возможность управления нагревателя температурой с литий-ионной батарей.

Ключевые слова: композитный материал, температура, нагреватель, микроконтроллер, драйвер, паяльник.

Поступила 14.04.2014 г.