N E W S
OF THE NATIONAL ACADEMY OF SCIENCES OF THE REPUBLIC OF KAZAKHSTAN
SERIES OF GEOLOGY AND TECHNICAL SCIENCES
ISSN 2224-5278
Volume 3, Number 430 (2018), 201 – 207

S. K. Abildinova[1], R. A. Musabekov[1], A. S. Rasmukhametova[1], B. Ongar[1], I. Zh. Yessengabylov[2], A. O. Aldabergenova[2], G. B. Issayeva[3]

[1]Almaty University of Power Engineering & Telecommunications (AUPET), Almaty, Kazakhstan,
[2]Zhetysu State University named after I. Zhansugurov, Taldykorgan, Kazakhstan,
[3]Caspian University, Almaty, Kazakhstan.
E-mail: aya.sss@mail.ru, ongar_bulbul@mail.ru, Ilias_E@mail.ru, aigul_ao@mail.ru, guka_issaeva@mail.ru

THE EFFICIENCY OF DISTRICT HEATING SYSTEMS IN CONDITIONS OF JOINT USE OF HEAT PUMPS

Abstract. The article describes the main problems of traditional heat supply in the Republic of Kazakhstan, discusses possible solutions to this problem. Development of practical examples of the implementation of heat pump technology at specific sites of a heat supply leads to the improvement of technical and economic parameters of the heating system. The development is aimed at the concept of using nontraditional sources of heat for the transition of heating systems to a new level of heat.

By analyzing existing examples of implementation in the work of heating systems with alternative heat sources and the results of the study determined the effectiveness of the installation of heat pumps in the Central heating station that uses the independent scheme of connection of consumers of heat. The use of a heat pump reverse system water to the evaporator as a source of low potential energy leads to a reduction in consumption of direct network of water from combined heat and power CHP heating unit quarterly network and consequently will decrease the flow rate of fuel combusted at the CHP.

Keywords: central heating; heat pump; mains water; teploelektrocentral; heating network; energy efficiency; low-grade heat.

In Kazakhstan, centralized heat supply based on combined heat and power generation at central heating plants (CHP) has been most widely developed and is currently the dominant system.

In the period from 1990-2005 the commissioning of new capacities at the CHP was carried out on a limited scale in connection with the economic downturn in the years of perestroyka. The key problem in all operating links of the district heating system is the moral and physical wear and tear of fixed assets. Low demand for thermal energy has led to deterioration in the technical and economic performance of heat supply systems. This led to an increase in the cost of production of heat and electricity.

Increasing the energy efficiency of district heating should be carried out in accordance with the program "Energy Saving-2020", adopted by the Decree of the Government of the Republic of Kazakhstan dated August 29, 2013, No. 904 [1]. The program pays much attention to the selection of the main heat sources, as this is the most important task in the design of energy-efficient heat supply systems for housing and communal services.

The program "Energy Saving 2020" determines not only the creation of technical, technological, legal, economic and organizational bases and measures to stimulate the efficiency of heat supply systems, but also their mutual coordination aimed at reducing the amount of resources used, in particular fuel resources for heat supply, while maintaining the appropriate useful effect from their use.

For effective resource and energy saving in the centralized heat supply systems of the Republic of Kazakhstan, the following main problems must be solved.

When talking about resource saving or reducing energy losses, they do not mean a quantitative expression, since it is automatically controlled by the first law of thermodynamics, but implies a qualitative characteristic of the energy itself. In the general case, the conservation of energy of heat is, in essence, the preservation of its quality.

The task of energy efficient heat supply depends on a number of problems that depend on the geographic location of the heat supply facility, the duration of the heating period, taking into account the average ambient temperature.

The cost of heat supply depends on the climatic conditions of Kazakhstan. According to the official source of information [2], the average January temperature in the Republic of Kazakhstan (2015) -11,0^{0}C (table 1).

Table 1 – Average temperature of January in different regions of the Republic of Kazakhstan

Region	Temperature, ^{0}C
Akmola	- 16,8
Aktobe	- 14,9
Almaty	- 6,5
Atyrau	- 9,6
East_Kazakhstania	- 16,5
Zhambyl	- 5,0
West Kazakhstan	-13,5
Karaganda	-14,5
Kyzylorda	-9,1
Kostanay	-17,0
Mangystau	-2,9
Pavlodar	-17,6
North-Kazakhstan	-18,1
South Kazakhstan	-2,0

Before the design of the heating system of buildings and the selection of the source of heat, the heat balance is calculated, which takes into account:

- the number of emissions from heat sources that operate on natural fuels;
- rational use of traditional natural resources, the influence of the "greenhouse effect" due to the release of harmful substances into the atmosphere;
- thermal density of the built-up area;
- deficiency of generation of thermal energy; kind of available local fuel;
-washing of existing engineering systems and heat networks;
-it is impossible to lay new heating mains.

The drawbacks of traditional heat sources are their low energy, economic and environmental efficiency (in the case of small boiler houses), since the burning of organic fuel pollutes the environment. Plus, the constantly rising tariffs for released thermal energy, aggravated by transportation costs in the production and distribution of energy. Hence, a low exergetic ECE, characterizing the maximum work that occurs when the thermodynamic system with a specified parameter is reversed into equilibrium with the surrounding medium.

In addition, there is an unreasonably high cost of building and maintaining heat networks, which are the most unreliable element of central heating systems.

At present, the heat networks of the Republic of Kazakhstan are characterized by a high degree of wear, about 70-80%, high accidents, and losses in heating networks are much higher than world indices.

The most effective and obvious option for solving energy saving problems in heat networks is the use of rational process flow sheets with heat pumps. The prospects for the use of heat pumps TN in the Republic of Kazakhstan are determined by the technological demand and the tendency to increase prices for fuel, heat and electricity.

Overcoming with the help of factors TN that reduce the efficiency of heat supply from the CHP is fully possible only in newly constructed district heating systems (DHS) and in new construction of residential and industrial buildings.

The new projects provide for increased requirements for thermal and sound insulation. For windows, double-glazed windows of increased tightness are used. Inside the premises, there is a mandatory installation of heat metering and air temperature control devices, heating devices with more intensive heat transfer from the network water (finned-surface finned radiators, "warm floors", etc.), which help to reduce both the temperature of direct supply water and reduce the temperature of the return network water due to intensive heat extraction.

So for "warm floors" the temperature of direct and reverse network water can lie in the range of 45÷30°C Under these conditions, a radical change in the temperature graph of direct and reverse water is possible-a reduction in these temperatures to a level sufficient for heating the premises and favorable for work TN with a high conversion factor. Under these conditions, a complete transition of the district heating systems DHS to the TN (CHP + TN system) is possible.

Currently, the network water is returned to the CHP plant at a temperature of 45 ÷ 70 °C. To achieve higher values of the TN conversion factor, this temperature should be reduced to 25-30 °C. This is possible not only by improving the design of buildings and their heating system, which was mentioned above. In addition to these solutions, it is possible (and appropriate) to lower the temperature of the return network water by installing heat pumps at central heating points (CHP). For TN, the source of low-potential heat will be the reverse network water.

In work [2] the system of heat supply of an apartment house with heat sources heat pump - thermal networks where the heat pump provides from 50 to 70% of heat demand is developed. The total duration of the operation of heat pumps depends on the value of the outside air temperature at the bivalent point on the heat load graph, determined by means of climatic data (Table 1).

In [3, 4], the idea of using low-potential heat concentrated on GRES-CHP by means of heat pump plants, which can be placed in centralized and individual heat points (CHS, IHP), which are part of the DHS, was proposed for the first time.

It is known that in DHS heat supply from CHP, as well as from the district boiler house, is carried out by a dependent and independent scheme for connecting external heat consumers. This circumstance, in turn, predetermines the appearance of a variety of schemes and methods for connecting heat pumps to the heat supply system, with the placement of TN both at the central heating point CHS and in close proximity to consumers.

All the listed shortcomings of traditional heat supply in conditions of energy saving and minimal harm to the environment, urgently require a different approach to solving the problem of heat supply for newly constructed housing. A possible solution to this problem is the beneficial use of low-temperature natural heat (+ 4 ... + +40° C) or waste industrial heat for heat supply with the help of heat pumps.

Figure 1 is a schematic diagram of the connection of heat pump plants to the heating and hot water supply system at the central heating station (CHS). The flow of direct network water (DNW) from the CHP enters the traditional heat exchangers 1 of heating the return quarterly water of the heating circuit, in which part of the flow of return quarterly water (flow G1k) is heated. Another part of Gtn of reverse quarterly water enters the condenser of the heat pump system and heats up at Δt = 15° C. In the evaporators of the HPP, part of the flow of the reverse network water $G_{2к} = G_1 - \Delta G$ is sloughed, after which it is discharged into the main collector of the reverse network water and then returned to the CHP.

After the mixer 3, the heating water from the district heating circuit through the internal distribution heating networks is supplied to the heating of the objects of the quarterly network, after which it returns to heating in the TN and TO-1 according to the scheme described above.

By slackening the return flow network of the SS, the direct water supply from the TPS is reduced in proportion to the amount of heat collected from the SS in the evaporator TN. It is the amount of low-potential heat (LPH) from the SS that lowers LPH in the cold source at the CHP, which ultimately leads to a reduction in fuel consumption directly to the CHP and, at the same time, to a reduction in heat consumption from the CHP to CHS at the central heating network of the quarterly network. This ensures a reduction in the price paid by consumers of this quarter of the city for heat supply.

To discuss the results of the calculation, as an example, the costs and temperatures of the network water are taken in the conditions of the CHS: $\Sigma G_{2к}$ = 70 m3 / h. $\Sigma G_{ТН}$ = 25 m3 / h. T_1 rep = 50° C; T_2 right = 65° C.

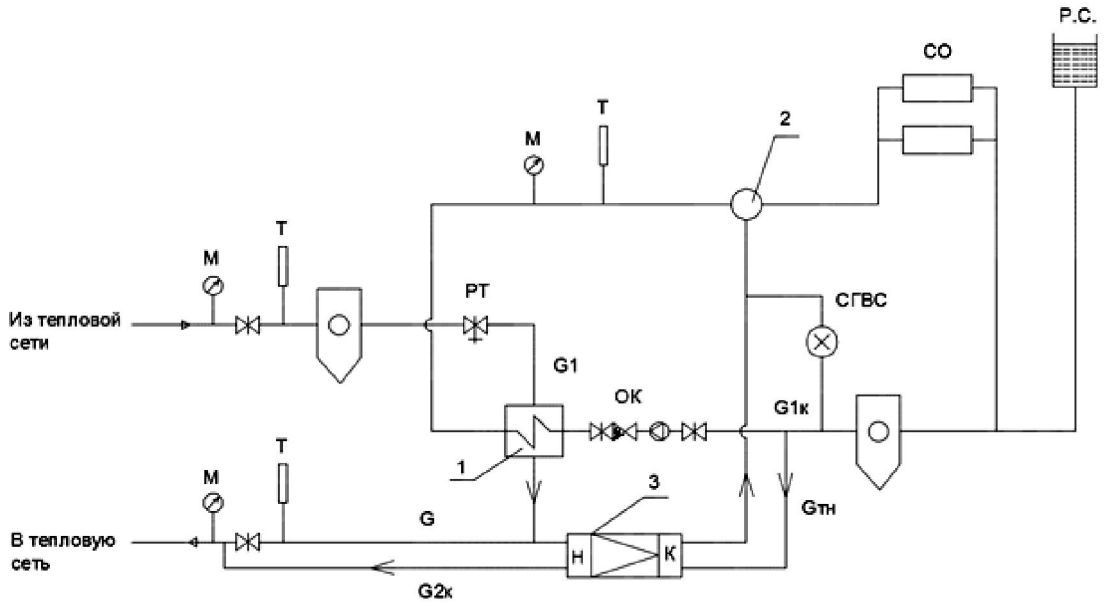

Figure 1 – Thermal diagram of the CHS with a TN with an independent heating circuit:
1 - water-water heat exchanger for the heating circuit (plate), 2-mixer, 2 - heat pump (TN), SS, HWS - external heat consumers of the heating and hot water supply system; G1 - direct grid flow to the CHS from the CHP; $G_{2к}$ - the return flow of return water returned to the CHP after TN; Gтн - the return water flow rate of the quarterly heating circuit, supplied for heating in TN; $G_{1к}$ - return water flow rate of the quarterly heating circuit, supplied for heating to the water-to-water heat exchanger (WWHE) of the traditional heat supply scheme; ΔG is the unused amount of return network water after the heat exchanger, returned to the CHP plant or for other purposes.

Heat output of the heat pump is determined by the formula (1)

$$Q = G_{TH} C_B \rho_B (T_{2прям} - T_{1обр}), \quad (1)$$

for the condition of the example in question, Q = 436 kW = 0.375 Gcal / h. Taking into account this heat load, one HT-300 water-to-water heat pump is chosen. The characteristics of the manufacturer for HT-300 are given in [5]. The HT-300 water-to-water heat pump operates on R-134 A refrigerant with a maximum condensation temperature of 60^0C.

With the duration of the heating season in Almaty in 2015-16, equal to 4248 hours (177 days) and the operation of one TN-300, the expected annual heat production with HPP will be 1593 Gcal, the electric power consumption for the drive will be TN - 382.6 MW·h. With the adopted tariffs for thermal (3890.72 tenge per 1 Gcal.) And electric energy (7.5 tenge per 1 kWh for energy-producing enterprises) for residential objects: proceeds from the sale of heat supply will be 6.2 million KZT, electricity costs - 2.87 million KZT.

One of the important advantages of such a thermal scheme is the lowering of the temperature of the return water, which makes it possible to increase the combined generation of electric power by the CHP on thermal consumption. This is all the more topical because the temperature of the return network water returned to the CHP is constantly overestimated, which has many different causes, and not only technical ones. The practice of the operation of heat networks in different cities of the Republic of Kazakhstan shows that the water temperature in the return line of the heat supply systems in excess of the normative thermal schedule is exceeded by 5-8 °C in winter.

The capacity for hot water TN-300 is G_{TH} = 25 m^3/h. At the same time, water is taken from the low-potential source (return water of heating systems) to the evaporator TH-300 - $G_{2к}$ = 50 m^3/h. Here it should be noted that with the same independent heating scheme without the installation of heat pumps, the flow of network water to the water-to-water heat exchangers of the heating circuit (plate) was G1 = 70 m^3/h. If one TH-300 is installed, this flow rate will be $G_{2к}$ = 50 m^3/h, i.e., $\Delta G = G_1 - G_{2к}$ = 20 m^3/h will be less.

Thus, the installation of heat pumps makes it possible to reduce the flow of the heating water flow to the heat exchangers.

By stalling the flow of SS (return network water), the direct water supply from the CHP is reduced in proportion to the amount of heat taken away from the SS in the HPP evaporator. Cooling of return water for this mode of operation of the TN is from $t_{2к}$=50^{0}C to $t_{1к}$=40^0, Δt=10^{0}C.

Figure 2 shows the p-H diagram of the thermodynamic cycle of a single-stage steam-compression heat pump HT-300.

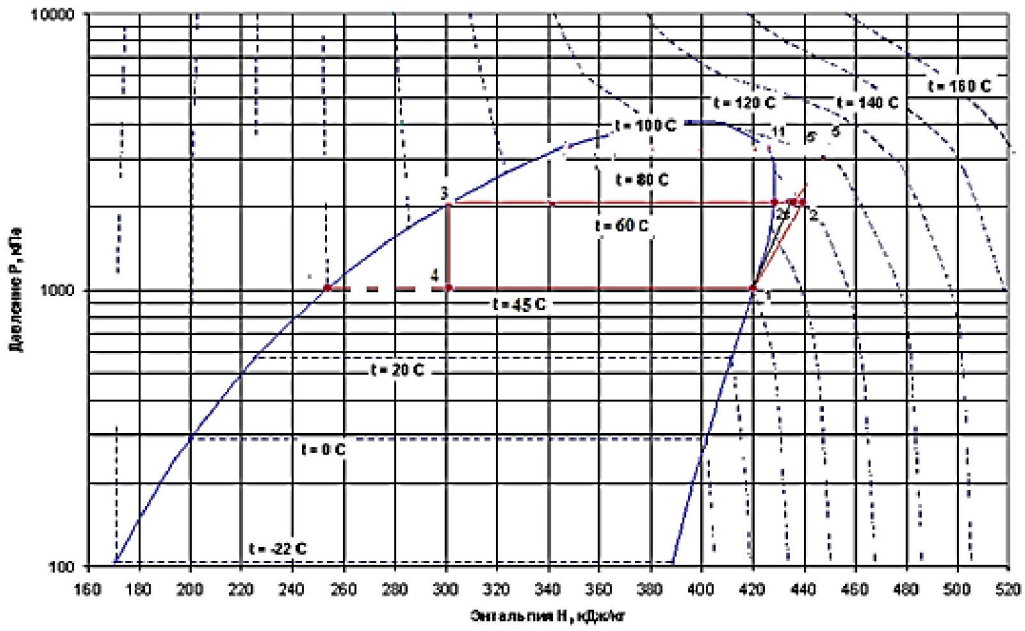

Figure 2 – Thermodynamic cycle of a single-stage steam-compression heat pump HT-300 with R-134A refrigerant in the p-H diagram

The temperature of the working agent R-134A in the heat pump condenser is -$t_к$= 60 ° C, in the evaporator - t_0= 45° C. In the p-H diagram, the process of condensation corresponds to line 2-3, evaporation process 1-4. The coefficient of thermal energy conversion by the TH-300 heat pump was calculated using parameters of the constructed thermodynamic cycle (Figure 2).

The coefficient of conversion of thermal energy by a heat pump is determined by the formula

$$\mu = \frac{Q_к}{N_e}, \tag{2}$$

where $Q_к$ – heat output of the heat pump; N_e - the electric power of the compressor drive and is μ = 4.84, which is acceptable from the point of view of the efficiency of the heat pump application.

Conclusions.

1. The use of heat pumps in the conditions of operation of the central heating point of heating systems along with traditional heat sources can significantly reduce the cost of direct network water from the heat source - CHP.

2. Installation of heat pumps in the central heat station allows rationally provide heat to consumers who have an independent scheme for connecting heating systems.

3. The thermal scheme of the central heat point of the central heating station with a heat pump providing heat to consumers of the quarterly heating and hot water supply system has been developed.

4. Calculations of the heat output of the heat pump installed in the CHS show that as a result of slackening of the return water flow in the evaporator TN, the direct water supply from the CHP is reduced in proportion to the amount of heat extracted from it.

5. The value of the coefficient of conversion of thermal energy by the heat pump TH-300 confirms the efficiency of using a heat pump in the operation of the CHS of heating networks.

REFERENCES

[1] The Law Of The Republic Of Kazakhstan. On energy saving and energy efficiency // access Mode: http: //adilet.zan.kz free (date accessed:10.02.2017).

[2] SNiP RK 2.04-01-2001. Building climatology. Astana: Committee for construction Affairs MI I T of RK, 2005. 114 p.

[3] Abildinova S.K., Muhiddinov D.N. Analysis of the operating modes of the heat pump in dual mode heating system // Proceedings of the Seventh All-Russian scientific and technical international conference "Energy: management, quality and efficient use of energy". Russia, Blagoveshchensk, Amur gos. Universitet, 2013. P. 430-436.

[4] Zakirov D.G., Rybin A.A. The use of low-grade teploty. AM: RUSAYNS, 2015. 154 p.

[5] Nikolaev Yu.Ye, Baksheev A.Y. Determination of the efficiency of heat pumps using heat return water CHP // Industrial power. 2007. N 9. P. 14-17.

[6] Loganina V.I., Fedoseev A.A., Khristolyubov V.G. Statistical methods of product quality management.

[7] Schor J.B. Statistical methods of analysis and quality control and reliability.

[8] Adamov V.E. Statistical study of rhythm of industrial production. M.: Statistics, 2011. 188 p.

[9] Aldokhin I. P. Modeling of production systems. Kharkiv: High school. Publishing house of Kharkov. UN-TA, 2008. 145 p.

[10] Astafiev V.E., Povolotskaya L.J., Chaikin V.P. Economic mechanism of the acceleration of scientific-technical progress/experience of industry. M.: Economics, 2012. 231 p.

[11] Aunapu F.F. Improvement of management of industrial enterprises: Abstract. dis. ... doctor. steward. sciences'. Barnaul, 2010.

[12] Bartashov L.V. Technical and organizational level of production: definition, economic evaluation, analysis. Kyiv: Naukova Dumka, 2011.

[13] Barlow R., Proshan F. Mathematical theory of reliability. M.: Soviet radio, 2009. P. 488.

[14] Buslenko N.P. Mathematical modeling of production processes on a digital computer. M.: Science, 2010.

[15] Valtukh K.K. Intensive complex and intensification of production // EKO. 2012. N 3.

[16] Varlamov I.A. foster the creation and implementation of new technology. M.: Profizdat, 2011. 79 p.

[17] Varlamov I.A., Sedlov P.A. Financial incentives for the creation of a new technology. M.: Ekonomika, 2012. 64 p.

[18] Vlasov B.V. choice of rational forms of organization of production. M.: Mechanical engineering, 2010. 240 p.

[19] Garlovsky N.In. Financial incentives for intensification of production / problems of theory, methodology and practice. M.: Finance, 2012. 319 p.

[20] Ginzburg E.G. Economics of production processes. Yaroslavl, yagu, 2011.

[21] Ginzburg E.G., Katz I.Ya. Theoretical bases of production organization. Yaroslavl, 2012. 92 p.

[22] Glukhov A.A., Eitingon V.N. Industrial production management. Issue I. Theoretical bases of management of socialist production. Voronezh, 2011.

[23] Gnedenko B.V., Belyaev Yu.K., Solovyov A. D. Mathematical methods of reliability theory. M.: Nauka, 2010. 524 p.

[24] Golovlev E.S. Comprehensive analysis of the technical and economic level. production in mechanical engineering. M., 2010.

[25] Gruznov I.I. Mastering the release of new products. M.: Mechanical engineering, 2012. 133 p.

[26] Dzhavadov G.A. Management of scientific and technical progress. M.: Znanie, 2012. 64 p.

[27] Druzhinin G.V. Classification of redundant systems // Telecommunications, 2010. N 7.

[28] Dumachev A. P. an Efficient system of production organization and management. M.: Ekonomika, 2011 - 142 C.

[29] Sutin A.A. improving the organization of production. M.: Economy, 2010. P. 79.

[30] Efimov V.V., Bart T.V. Statistical methods in product quality management.

Р. А. Мусабеков[1], С. К. Абильдинова[1], А. С. Расмухамедова[1], Б. Онгар[1], І. Ж. Есенғабылов[2], А. О. Алдабергенова[2], Г. Б. Исаева[3]

[1]Алматы энергетика және байланыс университеті, Алматы, Қазақстан,
[2]І. Жансугуров атындағы Жетісу мемлекеттік университеті, Талдықорған, Қазақстан,
[3]Каспий Университеті, Алматы, Қазақстан

ЖЫЛУ СОРҒЫЛАРЫН БІРЛЕСІП ҚОЛДАНУ ЖАҒДАЙЫНДАҒЫ ОРТАЛЫҚТАНДЫРЫЛҒАН ЖЫЛУМЕН ҚАМТУ ЖҮЙЕЛЕРІНІҢ ТИІМДІЛІГІ

Аннотация. Мақалада Қазақстан Республикасының жылумен қамдаудың дәстүрлі жүйесінің негізгі мәселелері сипатталып, мәселені шешудің мүмкін болатын жолдары қарастырылған. Нақты объектілерде жылу сорғыларға негізделген технологияларды енгізу жылумен қамтамасыз ету жүйелердің техникалық-экономикалық көрсеткіштерінің жақсаруына әкеледі. Әзірленген тұжырымдама дәстүрлі емес жылу көздерін пайдалану арқылы жылумен қамтамасыз ету жүйелері жұмысын жаңа деңгейге ауыстыруға бағытталған. Баламалы жылу көздерін жылу желінің жұмысына енгізудің қолданыстағы мысалдарын қарастыру және зерттеу нәтижелерін талдау арқылы жылуды тұтынушыларды желіге тәуелсіз қосу схемасын пайдаланатын

орталық жылу пунктінде жылу сорғыларын пайдалану тиімділігі анықталды. Жылу сорғысы орталық жылу пунктінде кері желілік суды буландырғышта төменгі қуатты жылу көзі ретінде пайдаланып, нәтижесінде жылуэлектр орталығынан берілетін жүйелік су шығынын қысқартады және оның салдарынан ЖЭО-да жағылатын отын шығыны төмендейді.

Түйін сөздер: орталықтандырылған жылумен қамдау, жылу сорғысы, жүйелік су, жылуэлектр орталығы, жылуды тұтыну, энергия тиімділігі, төменгі қайратты жылу.

Р. А. Мусабеков[1], С. К. Абильдинова[1], А. С. Расмухамедова[1], Б. Онгар[1], І. Ж. Есенғабылов[2], А. О. Алдабергенова[2], Г. Б. Исаева[3]

[1]Алматинский университет энергетики и связи, Алматы, Казахстан,
[2]Жетысуский государственный университет им. И. Жансугурова, Талдыкорган, Казахстан,
[3]Каспийский Университет, Алматы, Казахстан

ЭФФЕКТИВНОСТЬ РАЙОННЫХ ОТОПИТЕЛЬНЫХ СИСТЕМ В УСЛОВИЯХ СОВМЕСТНОГО ИСПОЛЬЗОВАНИЯ ТЕПЛОВЫХ НАСОСОВ

Аннотация. В статье описываются основные проблемы традиционного теплоснабжения в Республике Казахстан, рассматриваются возможные пути решения этой проблемы. Разработка практических примеров внедрения технологии тепловых насосов на конкретных участках теплоснабжения приводит к улучшению технических и экономических параметров системы отопления. Разработка нацелена на концепцию использования нетрадиционных источников тепла для перехода отопительных систем на новый уровень тепла.

Проанализировав существующие примеры внедрения в работе отопительных систем с альтернативными источниками тепла, и результаты исследования определили эффективность установки тепловых насосов в Центральной тепловой станции, которая использует независимую схему подключения потребителей тепла. Использование системы обратной воды системы теплового насоса для испарителя в качестве источника с низкой потенциальной энергией приводит к снижению потребления прямой сети воды из комбинированной тепловой и тепловой электростанции ТЭЦ, ежеквартальной сети и, следовательно, будет уменьшать расход топлива, сжигаемого на ТЭЦ.

Ключевые слова: центральное отопление; Тепловой насос; вода в сети; teploelektrocentral; тепловая сеть; энергоэффективность; низкосортная теплота.

Information about authors:

Issayeva G. B. – Caspian University, Head of the Automation and Computer Engineering Department, Candidate of Pedagogical Sciences, guka_issaeva@mail.ru

Abildinova S. A. – Almaty University of Energy and Communication, Ph.D., saule18kz@mail.ru

Musabekov R. A. – Almaty University of Energy and Communications, Ph.D., Associate Professor, mussabekov@aipet.kz

Rasmuhametova A. S. – Almaty University of Power Engineering and Communications, doctoral student of the department of PTE, aya.sss@mail.ru

Ohar B. – Almaty University of Power Engineering and Communications, senior lecturer of the department TE, doctoral candidate of the Department of Thermal Power Engineering, ongar_bulbul@mail.ru

Esengabylov I. Zh. – Zhetysu State University named after I. Zhansugurov, Ph.D., Ilias_E@mail.ru,

Aldabergenova A. O. – Zhetysu State University named after I. Zhansugurov, Ph.D., aigul_ao@mail.ru