N E W S
OF THE NATIONAL ACADEMY OF SCIENCES OF THE REPUBLIC OF KAZAKHSTAN
SERIES OF GEOLOGY AND TECHNICAL SCIENCES
ISSN 2224-5278
Volume 3, Number 430 (2018), 62 – 68

UDC 537.523.3

B. H. Aitchanov[1], Sh. A. Bakhtaev[2], W. Wojcik[3], A. S. Tergeusizova[4], A. Zh. Toigozhinova[5]

[1]Suleyman Demirel University, Almaty, Kazakhstan,
[2]Almaty university of power engineering and telecommunications, Almaty, Kazakhstan,
[3]Lublin university of technology, Lublin, Poland,
[4]Kazakh national university named after al-Farabi, Almaty, Kazakhstan,
[5]Kazakh academy of transport and communications named after M. Tynyshpayev, Almaty, Kazakhstan.
E-mail: [1]bekait@rambler.ru, [3]waldemar.wojcik@pollub.pl, [4]aliya55@mail.ru, [5]aynur_t@mail.ru

DEVELOPMENT OF METHODS FOR MEASURING LINEAR PARAMETERS OF MOVING DIELECTRIC FILAMENTS

Abstract. Methods and devices for contactless and continuous measurement of linear parameters (drawing speed and diameter) of thin and ultra-thin dielectric filaments and optical fibers (10–125 microns) are developed on the basis of impulse characteristics of a unipolar corona discharge in the process of their manufacture. The developed devices differ from those known for high accuracy and reliability of measurements and are immune to changes in the electrical characteristics of discharge gaps and the state of ambient air. In both cases, the device for measuring the speed of drawing and the diameter of the dielectric thread uses the initial portion of the current-voltage characteristic of the positive corona discharge in the electrodes when the corona discharge is in the "waiting" mode, and the charging by ions of the surface of the moving dielectric filament is performed by applying additional pulses of negative polarity to the electrodes.

Key words: transfer speed, fiber diameter, corona discharge, pulse corona, ions, pulse signal generators, charging, discharging, "waiting" mode.

Introduction. Thin and ultra-thin wire (5-100 microns) made of various metals and alloys (tungsten, molybdenum, nichrome, copper, etc.) is widely used in the vacuum and electronics industries. Parameters homogeneity and the reliability of the operation of the electric and radio tubes depend on a large extent on the quality of the wire, the electrical characteristics of which, with a constant composition of the metal, are determined mainly by the geometric dimensions of its cross-section. Therefore, the development of new methods and devices for precise control of the dimensions of micro wire in production conditions is of great practical importance. In most cases, micro-wires of metals and alloys are produced by hot or cold wire drawing through diamond dies.

Equally important is the development of methods for measuring linear parameters (drawing speed and diameter) of moving dielectric filaments in the form of thin resistance wires with glass insulation of thin enamel wires and optical fiber filaments. In this case, for example, one of the main stages of the process of manufacturing optical fiber (OF) is pulling it on the drawing unit. It is established that oscillation of the diameter along the length of the fiber rod, in many respects, determines the optical - physical properties of the OF (optical losses in the propagation of the signal, bandwidth, dispersion, etc.), and the scatter of the exhaust velocities of the OF also significantly affect its strength and optics - physical properties [1].

A wide variety of electrode shapes and their location relative to each other, as well as the possibility of a corona discharge in atmospheric air, created the prerequisites for the development of a whole series of new methods and corona discharge transducers designed to measure the parameters of micro wires and linear dimensions of various objects [2].

Device for measuring the speed of pulling of dielectric filaments [3]. The main purpose of developing a device for measuring the speed of drawing dielectric threads is to ensure high accuracy and reliability of measurement when the indications of results are independent of changes in the electrical characteristics of the discharge gaps, the state of atmospheric air and the values of the geometric parameters of the dielectric filaments.

Previously, a method has been developed for measuring the speed of pulling a micro wire [4], which contains two additional ring electrodes identical in shape and size located coaxially on both sides of the main electrode, and a balance circuit with an output device, containing the main ring electrode surrounding the monitored wire. In this device, due to the appearance of an electro-gas dynamic effect near the surface of a moving wire, processes of entrainment and the introduction of space charges into the discharge zones of additional electrodes arise, which ultimately allows us to judge the values of the speed of wire drawing. In this device, it is noted that the use of a balanced measurement scheme significantly reduces the errors in measuring the speed of wire drawing with changes in electrical characteristics of discharges and geometric parameters of the corona wire. Meanwhile, due to the different location of the additional electrodes, which are essentially measuring, the changes in temperature and pressure of the ambient air can have a significant effect on the accuracy of the measurement. In addition, the proposed device also does not take into account the effect of difference in edge effects in two additional electrodes. In addition, because of the impossibility of replacing the corona wire with a dielectric thread, this device is not suitable for our purposes.

The measurement of the speed of drawing dielectric threads is based on the principles of measuring velocities by the method of marks, which are preliminarily applied to moving objects, and then the speeds of their passage through various measuring instruments are determined [5]. However, there are significant technical difficulties with marking when measuring the speed of movement of micro-objects, such as a dielectric thread or a micro wire with enamel coating (10-100 microns).

The proposed device for applying labels to a dielectric thread uses an outer corona discharge region that occurs when a sufficiently high voltage is applied between the corona wire and the outer plane-parallel electrode. In the outer corona discharge region, unipolar ions are usually present, which charge the surface of the dielectric filament. One of the best ways to get a clear picture of electronic labels on the surface of a dielectric filament is to supply the discharge chamber with additional clock pulses of sufficient magnitude with a certain duration and frequency. In this case, the dielectric filament is located parallel to the corona wire and in the middle of the discharge gap between the wire and the flat electrode. Next, a dielectric filament with electronic marks passes through a second measuring electrode, located some distance from the first electrode. When the filament passes through the measuring electrode, there are processes of discharge of the filament and accordingly, electric signals with a clock frequency appear on the electrode load. Now, choosing the duration of the reference signals, in other words, choosing the counting time of the clock pulses during this time, the number of pulses determines the speed of thread pulling.

To improve the accuracy of measurement and reliability of results, as well as to increase the noise immunity of the measurement to changes in the characteristics of the corona discharge and the geometric parameters of the measured dielectric filament, a positive corona discharge is used in both electrodes, its initial section of the current-voltage characteristic when the corona discharge is in the " or a small discharge current flows (not more than 1 μA). The choice of a positive corona discharge is due to the fact that it has a high stability of the characteristic and there are no electron avalanche processes that form the random pulses of Trichel [6]. As clock pulses for the application of electronic tags, rectangular pulses in the form of a "meander" shape are chosen for the filament, which close the discharge gap with a positive half-wave, and in the other half-wave create pulsed discharges that charge the moving dielectric filament.

Figure 1 shows functional diagram of the device for measuring the speed of pulling the dielectric thread during its manufacturing. The device contains two identical flat-parallel electrodes *1,2* shown in figure 2(a), which coaxially surround the corona wire *3* and are located at some distance from each other. Controlled dielectric thread *4* passes through the discharge zone of the corona discharge. In our case, a high voltage power supply *5* with negative polarity at the output is used, which allows obtaining a positive corona discharge in the discharge gaps between the electrodes *1* and *2* and the wire *3*. Stabilization of the corona discharge characteristics in two discharge chambers 1 and 2 and creation of the "waiting" mode

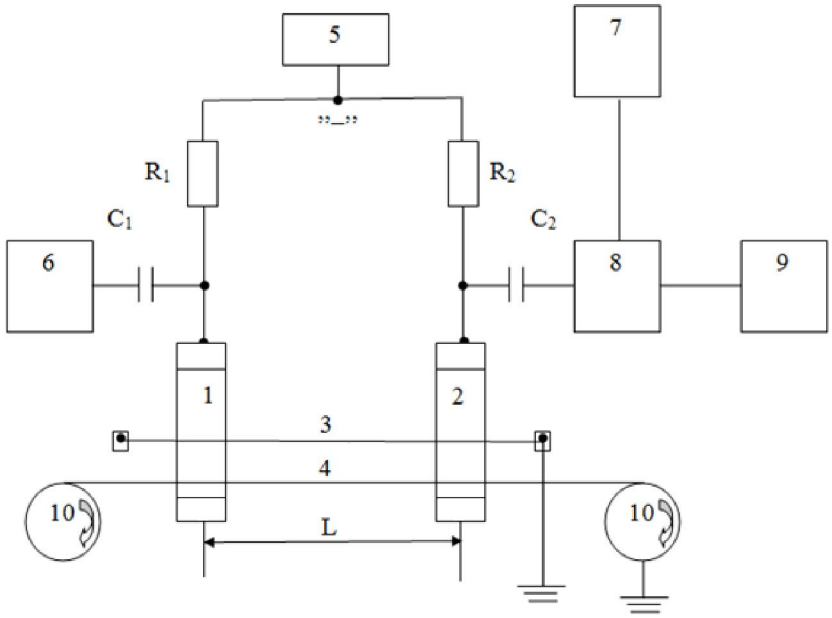

Figure 1 – Functional diagram of the device for measuring the speed of pulling the dielectric thread, where 1,2 is two identical planar-parallel electrodes, 3 is the corona wire, 4 is the dielectric thread, 5 is the power source, 6 is the high-frequency clock generator, 7 is the low-frequency reference pulse generator, 8 is the electronic unit, 9 is the pulse counter, 10 – rewind unit

conditions are achieved with the help of high resistance resistors *R1* and *R2*. In addition, the device contains two pulse signal generators: one high-frequency clock generator 6, and the other low-frequency pulse generator - of the reference pulses *7*. The supply and removal of pulse signals to the high-voltage points of the circuit are carried out by high-voltage capacitors *C1* and *C2*. The output signal from the electrode *2* goes to the electronic unit *8* and, after conversion, is transmitted to the pulse counter *9*. The electronic unit *8* shown in Figure 2(b) consists of the pulse former *1* and the electronic switch *2*. The distance between *1* and *2* is denoted by *L*.

When a sufficiently high negative voltage voltage is applied to the parallel-parallel electrodes *1* and *2*, conditions are created for the occurrence of a positive corona discharge between them and wire *3*. With two high-resistance resistors *R1* and *R2*, and adjusting the high-voltage value *5*, a "waiting" mode is established in two discharge gaps *1* and *2*. Then, on the electrode *1* from the clock pulse generator *6*, square pulses are transmitted through *C1*, in the form of a "meander" and for a negative half-wave it flows through the discharge gap imp corona discharge, which provides charging of the dielectric thread *4* located in the discharge zone. In the "waiting" discharge mode, the operating point is at the initial portion of the volt-ampere characteristic of the corona discharge, and therefore, a positive half-wave of the clocks closes the discharge gap, which makes it possible to purge the discharge zone and the surface of the dielectric filament from foreign charged particles. When pulling, the dielectric thread with electronic labels enters the second measuring electrode *2*, where it discharges and at the same time, pulse signals with a clock frequency appear on the load of the electrode *R2*. These pulses through *C2* are fed to the input of the electronic unit *8*, consisting of the pulse former 1 and the electronic key *2* (figure 2(b)). They in the pulse former *1* are converted into a convenient form for the pulse counter and enter the electronic key *2*. The electronic key *2* passes them only when the reference signal from the generator *7* is applied to it and for a time equal to the duration of the reference signal. The pulse counter *9* shows the number of pulses transmitted through the electronic key, which will be proportional to the speed of the thread. Thus, it becomes possible to perform the calibration of the pulse counter according to the previously known values of the dielectric filament pulling speed, measured in stationary conditions by control devices with a higher measurement accuracy.

Due to the fact that the method of electronic tags usually works by the algorithm "0 or 1", which means the signal is there or not, in principle, it is possible to exclude the influence on the measurement

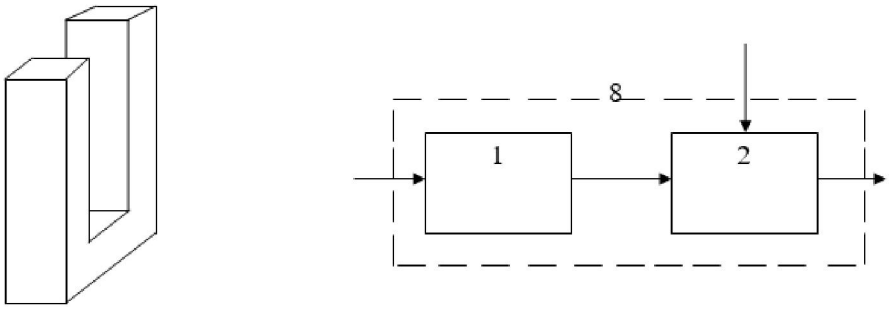

a) b)

Figure 2 – The shape of the electrodes and the electronic unit:
a) form of electrodes, б) the electronic unit, where 1 – pulse shaper, 2 – electronic key

accuracy of changes in a number of parameters of the measuring device, for example, changes in the electrical characteristics of the corona discharge, The state of the ambient atmospheric air and the geometric dimensions of the controlled filament. If this methodological error of measurement is minimized, the rest of the measurement error will be determined by the instrumental error of the measuring instruments used in the device. Somewhat simplifies the task is that the measurement accuracy of the standard equipment used is known in advance or it is possible to select them.

The device has the following parameters: the plane-parallel electrodes have a width of 1.5 cm, the working length is 1 cm, the gap between them is L = 2 cm, the diameter of the corona wire from tungsten is 100 microns. The controlled filament is located at a distance of 0.3 cm from the surface of the outer electrode. The ballast resistances R1 and R2 were 1 mΩ, the capacitors C1 and C2 were 1 μF. A high-voltage voltage source of the VS-22 type was used to power the discharge chambers. The sources of the pulse signals were generators G5 - 88 (f = 1 kHz, U = 100V) and Г5-72 (f = 1Hz, U = 10V).

Experimental tests of the device were carried out on a rewinding unit 10 (figure 1) with a rate of change in the speed of winding up to 30 m/min. Copper wires with enamel coatings in the range of diameters of 20-100 microns have been tested as dielectric strands. Experimental measurements have shown that changes in atmospheric air pressure within ±20kPA and wire diameter by ±10 microns do not affect the accuracy of measuring the dielectric filament pulling speed, which is about 1-2% of the measured velocity. The obtained accuracy of the measurement of the speed of pulling the dielectric yarn corresponds to a calibration curve constructed from the values of the drawing speeds in the range 1-30 m/min, measured under stationary conditions.

Device for measuring the diameter of moving dielectric filaments [7]. Close to the technical essence, the proposed device is a known device for controlling the inhomogeneity of moving dielectric threads [8], containing two ring electrodes concentrically surrounding the common corona wire electrode, high voltage power supplies with a constant stabilized output voltage, a load resistance and a voltmeter constant current, the controlled dielectric filament being pulled through the outer corona discharge zone, where the uniformity of the distribution volume charge is the highest. In this device, due to the presence of the discharge current stabilization effect when the two corona discharge zones are connected in series, the effect of the change in the state of atmospheric air on the accuracy of the object control will be negligible. In fact, the effects of the change in the state of atmospheric air on the discharge currents in the two electrodes can differ substantially. Since, at identical voltages on the electrodes, the negative corona discharge proceeds more efficiently and besides it is established that when the microelectrodes of negative polarity are corrupted there is always a pulsed discharge regime [2]. The proposed device also does not take into account the effect of the difference in the edge effects of the two electrodes. All this can greatly reduce the accuracy of measuring the device.

The main distinguishing feature of the proposed device is that in all three electrodes, the initial portion of the volt-ampere characteristic of the positive corona discharge is used, when the corona discharge is in the "waiting" mode, and the charging by ions of the surface of the moving dielectric filament occurs when additional pulses of negative polarity are fed to the middle electrode the form of half-waves of sinusoidal voltage. In this case, the middle electrode is covered on both sides by electrodes of similar

shape and size, which excludes the effect of edge effects on this electrode when pulsed charging of the thread.

Figure 3 shows the functional diagram of the device for measuring the diameter of the dielectric thread during its drawing. The device comprises three plane-parallel electrodes *1*, *2*, *3* (figure 2(a)) identical in shape and size and located at predetermined distances, a corona wire *4*, a controlled dielectric yarn *5*, a high voltage power supply with negative polarity at the output 6, a source of unipolar pulses *7*, amplitude detector *8* and a DC voltmeter *9*. The supply of pulse signals to the high-voltage points of the measuring circuit is carried out by high-voltage capacitors *C1* and *C2*, and their removal also through capacitor *C3*. The stabilization of the electrical characteristics of the corona discharge in the electrodes and the creation of the "waiting" regime are provided by using high resistance resistors *R1*, *R2*, *R3* and by selecting the high voltage value. Figure 4 shows the unipolar pulse source, consisting of a step-up transformer T_p with an average point in the second winding and two amplitude converters (*D1, R4* and *D2, R5*). It produces two types of unipolar pulses for additional supply of electrodes *1* and *2*.

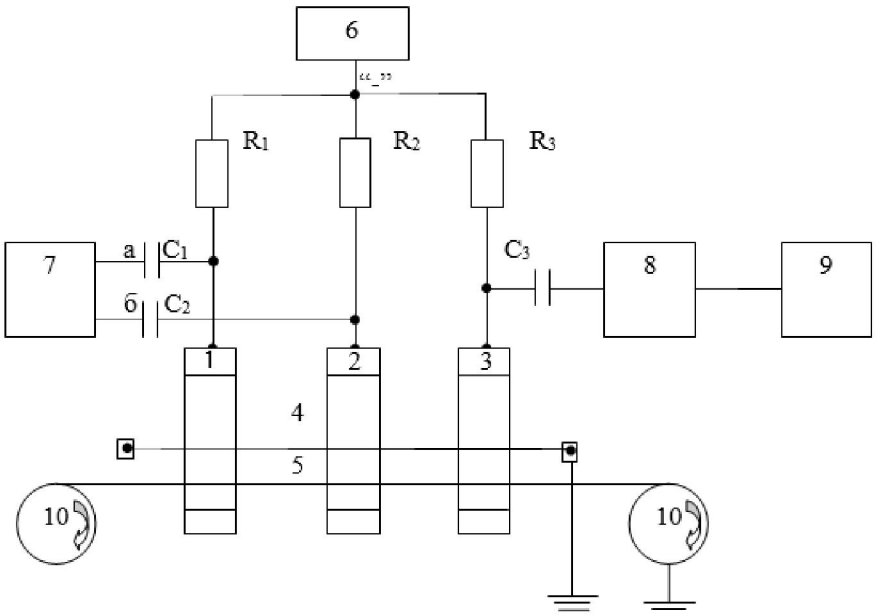

Figure 3 – Functional diagram of the device for measuring the diameter of the dielectric thread, where 1,2,3 are three identical planar-parallel electrodes, 4 is the corona wire, 5 is the dielectric thread, 6 is the power source, 7 is the unipolar pulse source, 8 is the amplitude detector, 9 is the DC voltmeter, 10 is the rewinder

When a sufficiently high negative voltage is applied to the external electrodes, conditions are created for the occurrence of a positive corona discharge between them and the wire *4*. Then, adjusting the high voltage values *6* and achieving high-resistance resistance *R1-R3* obtain a "waiting" mode in all discharge gaps. After that, from a source of unipolar pulses, pulses of negative polarity are fed through *C1* to the middle electrode *2* in the form of half-waves of sinusoidal voltage. In this case, an impulse corona discharge arises in the discharge gap of the electrode *2*, which charges the surface of the dielectric filament *5*, which is located in the outer zone of the discharge, with positive ions. In view of the transient nature of the transition of the ions in the discharge gap (20±30 μs), during a half-wave of the sinusoidal voltage, the dielectric filament succeeds in charging up to the "limiting charge" in accordance with the theory of Portenier [9]. According to this theory, it is established that the "ultimate charge" of a moving filament with constant dielectric constant of the material will, in the first place, depend on the dimensions of the surface area of the filament, i.e. from its diameter. The charged dielectric filament enters the electrode *3*, which is in the "waiting" mode and is discharged there. When the thread is discharged at the load *R3* of the electrode *3*, impulse signals appear proportional to the "limiting charge" of the filament.

Pulsed signals are converted into an amplitude detector into a constant voltage, which is measured by a voltmeter. Graduation of the voltmeter scale is carried out in advance according to known standard diameters of the dielectric thread. One of the differences of the device is that simultaneously with a half-

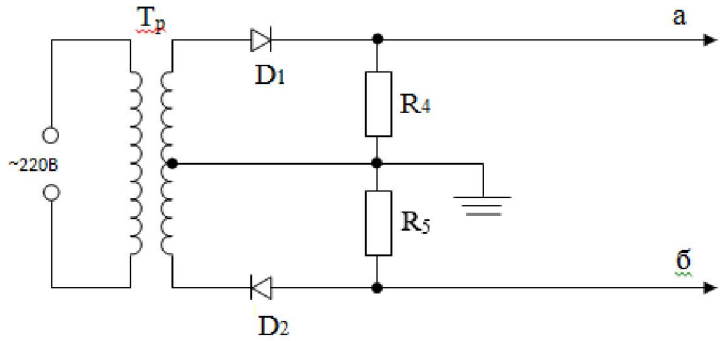

Figure 4 – Schematic of the source of unipolar pulses,
where T_p is a step-up transformer, D1 R4 and D2 R5 are amplitude converters, a is the output of a half-wave of a sinusoidal voltage of positive polarity, б is the output of a half-wave of a sinusoidal voltage of negative polarity

wave of negative polarity of the sinusoidal voltage applied to the electrode *2*, a half-wave of positive polarity is fed to the electrode 1, while the discharge gap of the electrode *1* is closed and the filament charging by the "dark" corona discharge current in "Standby" mode.

The device has the following parameters: the plane-parallel electrodes have a width of 1.5 cm, the working length is 1 cm, the gap between them is 0.1 cm, the diameter of the corona wire from tungsten is 100 microns, the controlled filament is located at a distance of 0.3 cm from the surface of the outer electrode, the ballast resistances R1, R2, R3 were equal to 1 mΩ, capacitors C1, C2, C3 – 1 μF. As a high-voltage power source of voltage type VS-22.

Experimental measurements have shown that changes in the state of the ambient air and the speed of the moving filament do not significantly affect the accuracy of measuring the diameter of the filament, which amounted to about 1-2% of the measured diameter. The resulting accuracy in measuring the diameter of the filament corresponds to a calibration curve constructed from known standard diameters in the range 20-100 microns.

Conclusions. Methods and devices for contactless and continuous measurement of linear parameters (speed of drawing and diameter) of dielectric threads of optical fiber are developed, the application of which provides automatic control and control of the technological process of manufacturing of OB.

REFERENCES

[1] Kondratiev G.M., Dulnev G.N., Platunov E.S., Yaryshev N.A. Applied physics: Heat transfer in instrument engineering. St. Petersburg State University of Information Technologies, Mechanics and Optics. St. Petersburg, IVA, 2003. 513 p.

[2] Bakhtaev Sh.A., Bokanova A.A., Bochkareva G.V., Sydykova G.K. Physics and technology of corona discharge devices. Almaty, 2007. 278 p.

[3] Application for utility model № 2018/0174.2. "Device for measuring the speed of pulling dielectric threads" / Bakhtaev Sh.A., Tergeusizova AS, Aitchanov B.Kh., Sydykova G.K, Toigozhinova A.Zh. The NIIP conclusion on the grant of a utility model patent dated March 19, 2018.

[4] Provisional patent of the Republic of Kazakhstan №12038 IPC G01 P 3/00. "Method for measuring the speed of wire drawing" / Abishev M.A., Bakhtaev Sh.A., Bochkareva G.V., Baimakhanova Z.A., Titova T.S. Published on 16.09.2002.

[5] Ilinskiy V.M. Non-contact measurement of consumption. M.: Energia, 1970. P. 5-28.

[6] Dzhuvarly Ch.M., Gorin Yu.V., Mekhtizade R.N. Corona discharge in electronegative gases. Baku: ELM, 1988. 144 p.

[7] Application for utility model № 2018/0175.2. "Device for measuring the diameter of moving dielectric filaments" / Bakhtaev Sh.A., Tergesizova A.S., Aitchanov B.Kh., Sydykova G.K., Musapirova G.D. The NIIP conclusion on the grant of a utility model patent dated March 19, 2018.

[8] Provisional patent of the Republic of Kazakhstan №12030. "Method for controlling the inhomogeneities of moving dielectric filaments" / Abishev M.A., Bakhtaev Sh.A., Bochkareva G.V., Baymakhanova Z.A., Titova T.S. Published on 16.09.2002, IPC G01 B7/12.

[9] Vereshchagin V.P. Corona discharge in devices of electron-ion technology. M.: Energoatomizdat, 1985. 159 p.

[10] Bahtaev Sh.A., Kozhaspaev N.K., Kodzhabergenova A.K. Raschet jelektricheskih polej unipoljarnoj korony so slozhnoj konfiguraciej jelektrodov // Vestnik AUJeS. 2015. N 1(28). P. 46-51.

[11] Bahtaev Sh.A., Bochkareva G.V., Musapirova G.D. Metody opredelenija razmernyh parametrov chehla unipoljarnoj korony // Vestnik KazATK. 2014. N 5(90). P. 92-97.

[12] Bahtaev Sh.A., Bochkareva G., Musapirova G.D. Non-contact measurement meters of micro-sizes on coronary discharge // NEWS of the National Academy of Sciences of the Republic of Kazakhstan. 2017. Vol. 4, N 424. P. 208-218.

Б. Х. Айтчанов[1], Ш. А. Бахтаев[2], В. Вуйцык[3], А. С. Тергеусизова[4], А. Ж. Тойгожинова[5]

[1]Сулейман Демирел университеті, Алматы, Қазақстан,
[2]Алматы энергетика және байланыс университеті, Алматы, Қазақстан,
[3]Люблин техникалық университеті, Люблин, Польша,
[4]Әл-Фараби атындағы Қазақ ұлттық университеті, Алматы, Қазақстан,
[5]М. Тынышбаев атындағы Қазақ көлік және коммуникация академиясы, Алматы, Қазақстан

ДИЭЛЕКТРЛІК ЖІПТЕРДЕ ҚОЗҒАЛАТЫН СЫЗЫҚТЫ ПАРАМЕТРЛЕРДІ ӨЛШЕУ ӘДІСТЕРІН ӨҢДЕУ

Аннотация. Дайындау процесінде, бір тасымалды тәжді (каронды) разрядтың импульсті сипаттамасының негізінде жұқа және өте жұқа диэлектрлік жіптердің және оптикалық талшықтардың (10–125 микрон) сызықты параметрлерін (жылдамдық, тартажонғыштар және диаметр) үздіксіз, шексіз өлшеу әдістері мен құрылғылары өңделген. Өңделген құрылғының белгілі құрылғылардан айырмашылығы дәлдігі жоғары, өлшеудің сенімділігімен, разряд аралығындағы электр сипаттамасының өзгерісіне және қоршаған орта атмосфера ауасының өзгерісіне қарсы тұра алатындығында. Осы және басқа жағдайларда жіптерді тарту жылдамдығын өлшеуге және диэлектрикалық жіптердің диаметрі үшін электродтағы оң тәжді разрядының вольтамперлі сипаттамасының бастапқы аймағы қолданылады. Бұл жағдайда тәжді разряд «күту» режимінде болады, сонымен қатар диэлектрлік жіптердің үстінде қозғалатын иондармен зарядтау электродтарға қосымша теріс полярлы импульстерді беру арқылы орындалады.

Түйін сөздер: тартажонғыштар жылдамдығы, талшықты-оптикалық диаметр, тәжді разряд, импульстік тәж, иондар, импульстік сигналдардың генераторлары, зарядтау, разрядтау, «күту» режимі.

Б. Х. Айтчанов[1], Ш. А. Бахтаев[2], В. Вуйцык[3], А. С. Тергеусизова[4], А. Ж. Тойгожинова[5]

[1]Университет имени Сулеймана Демиреля, Алматы, Казахстан,
[2]Алматинский университет энергетики и связи, Алматы, Казахстан,
[3]Люблинский технический университет, Люблин, Польша,
[4]Казахский национальный университет имени аль-Фараби, Алматы, Казахстан,
[5]Казахская Академия транспорта и коммуникации имени М.Тынышпаева, Алматы, Казахстан

РАЗРАБОТКА МЕТОДОВ ДЛЯ ИЗМЕРЕНИЯ ЛИНЕЙНЫХ ПАРАМЕТРОВ ДВИЖУЩИХСЯ ДИЭЛЕКТРИЧЕСКИХ НИТЕЙ

Аннотация. На основе импульсных характеристик униполярного коронного разряда разработаны методы и устройства для бесконтактного и непрерывного измерения линейных параметров (скорость протяжки и диаметр) тонких и сверхтонких диэлектрических нитей и оптических волокон (10–125 микрон) в процессе их изготовления. Разработанные устройства отличаются от известных высокой точностью и надежностью измерений и обладают помехоустойчивостью к изменениям электрических характеристик разрядных промежутков и состояния окружающего атмосферного воздуха. В том и другом случае устройство для измерения скорости протяжки и диаметра диэлектрической нити используется начальный участок вольтамперной характеристики положительного коронного разряда в электродах, когда коронный разряд находится в «ждущем» режиме, причем зарядка ионами поверхности движущейся диэлектрической нити производится подачей на электроды дополнительных импульсов отрицательной полярности.

Ключевые слова: скорость протяжки, диаметр оптоволокна, коронный разряд, импульсная корона, ионы, генераторы импульсных сигналов, зарядка, разрядка, «ждущий» режим.

Information about authors:

Aitchanov Bekmurza Husainovich – dr. prof, Suleyman Demirel University, Almaty, Kazakhstan. E-mail: bekait@rambler.ru

Bakhtaev Shabden Abuovich – d.t.n., Almaty University of Power Engineering and Telecommunications, Almaty, Kazakhstan.

Wojcik Waldemar – dr. prof, Lublin University of Technology, Lublin, Poland. E-mail: waldemar.wojcik@pollub.pl

Tergeussizova Aliya Sovetjanovna – M. Eng. Kazakh National University named after al-Farabi, Almaty, Kazakhstan. E-mail: aliya55@mail.ru

Toigozhinova Aynur Zhumakhanovna – doctor PhD, Kazakh Academy of Transport and Communications named after M. Tynyshpayev, Almaty, Kazakhstan. E-mail: aynur_t@mail.ru