N E W S
OF THE NATIONAL ACADEMY OF SCIENCES OF THE REPUBLIC OF KAZAKHSTAN
SERIES OF GEOLOGY AND TECHNICAL SCIENCES
ISSN 2224-5278 **https://doi.org/10.32014/2018.2518-170X.25**
Volume 5, Number 431 (2018), 192 – 200

UDC 621.73.07

E. Askarov[1], A. Zhankeldi[1], B. Absadykov[2], G. Smailova[3]

[1]Kazakh National Research Technical University after K. I. Satpayev, Almaty, Kazakhstan,
[2]Institute of Chemical Sciences named after A. B. Bekturov, Almaty, Kazakhstan,
[3]Kazakh national agrarian university, Almaty, Kazakhstan.
E-mail: erlan57@mail.ru; adilet.zhankeldi@gmail.com;
b_absadykov@mail.ru; smailova.g@kaznau.kz

DESIGN FEATURES OF A CAM-SCREW PRESS WITH A LARGE EFFORT

Abstract. Nowadays, machine-building has become one of the main branches of the world industry with a share of about 30% of all manufactured products. Providing other industries with technological equipment for maintaining a productive work is the main task of engineering. Serial and mass production of parts with the least loss of materials and high mechanical properties are ensured by using press equipment which is included in forging and stamping equipment. Despite the long history of its existence and the works of thousands of scientists in this field, the press equipment has problems mainly in the crank press. Many works are being done in order to correct its existing shortcomings without changing the scheme of a crank press mechanism. The authors propose a fundamentally new design of a mechanical press.

This article is related to the field of metal forming by presses, particularly by mechanical presses. The paper considers the construction of the original mechanical press of a cam-screw type and provides calculations of the main design parameters of the press with a force of 400 kN. It also displays the working principle of the press. The calculations of the main parameters of a cam-screw press are considered in this article. The layout of the press with the location of the main nodes is illustrated. The height of the press is reduced by 19% compared to an analog of crank. The design of the new press is simpler and more reliable than the crank analog.

Keywords: mechanical press, cam-screw press, crank press, metal forming by press.

Introduction. Mechanical presses are considered as machine tools. In terms of their prevalence in industry, they occupy the second place after metal cutting machines and they occupy the first place among all types of forging and pressing machines [1]. It is possible to obtain details on presses which do not require significant processing, and often do not require machining by cutting operations. High productivity, the possibility of automation and its low cost are the main characteristics of the pressing equipment.

A common feature of mechanical presses is the presence of a mechanical connection (gears, shafts, levers) between the motor and the machine`s actuator [1].

The modern presses are divided into 3 types: crank, hydraulic and screw press [2].

The action of the hydraulic press is based on the law of hydrostatic pressure Pascal. The pressure P which is produced by a pump is transferred to the press cylinder through a pipe by making the plunger move. An effort is increased while connecting the press plates [3].

Screw presses include technological forging and stamping machines, in which the energy of transformation is converted into useful work through a screw working mechanism [4].

Crank presses are one of the most common types of mechanical presses. The principle of operation of crank presses (presses and automatic machines) is based on the use of kinetic energy of the rotational movement of the flywheel, which is transmitted to the actuating link, the slider, with the help of a crank-slider or eccentric mechanism for deformation of the metal. During the working stroke, a part of this energy is expended on the useful work of deformation of forging [5].

Mainly crank presses are used in the metal processing by presses. A crank press drives the slider-crank mechanism, forming the work piece with the die repeatedly running at bottom dead center (BDC). Therefore, the position error of the machine, relative to BDC, directly determines the work piece accuracy [6]. However, crank presses have drawbacks, such as low productivity and low efficiency [7]. The energy efficiency of the crank press is about 20-25% [8]. Also, crank presses have a high probability of jamming. An unfavorable phenomenon such as jamming of the crank-slider mechanism in the bottom or near-to it position of the slider may arise in the presses operating in technological operations with the maximum force in the lowest position of the slider. The jamming can take place either when the slider is not reaching its lowest position, or when it goes through the lowest position [9, 10]. It is shown in the work [11] that the torque of the crank mechanism has the smallest indication in the lowest position. Crank presses are used for all types of stamping: sheet metal and volume, hot and cold, including ones which are used for separation operations. However, the crank presses are not used for free forging because of the presence of a fixed extreme working position [12].

The authors conducted a research on solving this problem, and thus the engineering and technical solutions were found. It is recommended to use new structures based on the original cam-screw mechanism [13, 14].

Materials and methods. The original cam-screw mechanical press was considered in these papers [15, 16]. The cam-screw press consists of the following parts (figure 1): the drive shaft 1, on which the cylinder 2 with the conical helical surface 3 with the inclination angle of the generator AE is coaxially located on the axis of the shaft 1 which equals to α. The surface has a bevel at an angle βto the horizontal. A slider 4which has the possibility of free vertical axial movement in the body 5 with the tool 8 is installed under the cylinder 2.A spring 7 is provided for returning it to its original position. In the upper part of the slider 4, there is a concave surface 6 which is made to contact the screw surface 3 and it has an inclination angle to the horizontal which equals to β. The half-coupling 11 and 12 are mounted on the shaft 1. For an actuation mechanism 10 is used for connecting them, while the spring 9 is used for separating them, h is the theoretical stroke length of the slider, the real length is less than about 0.75h.

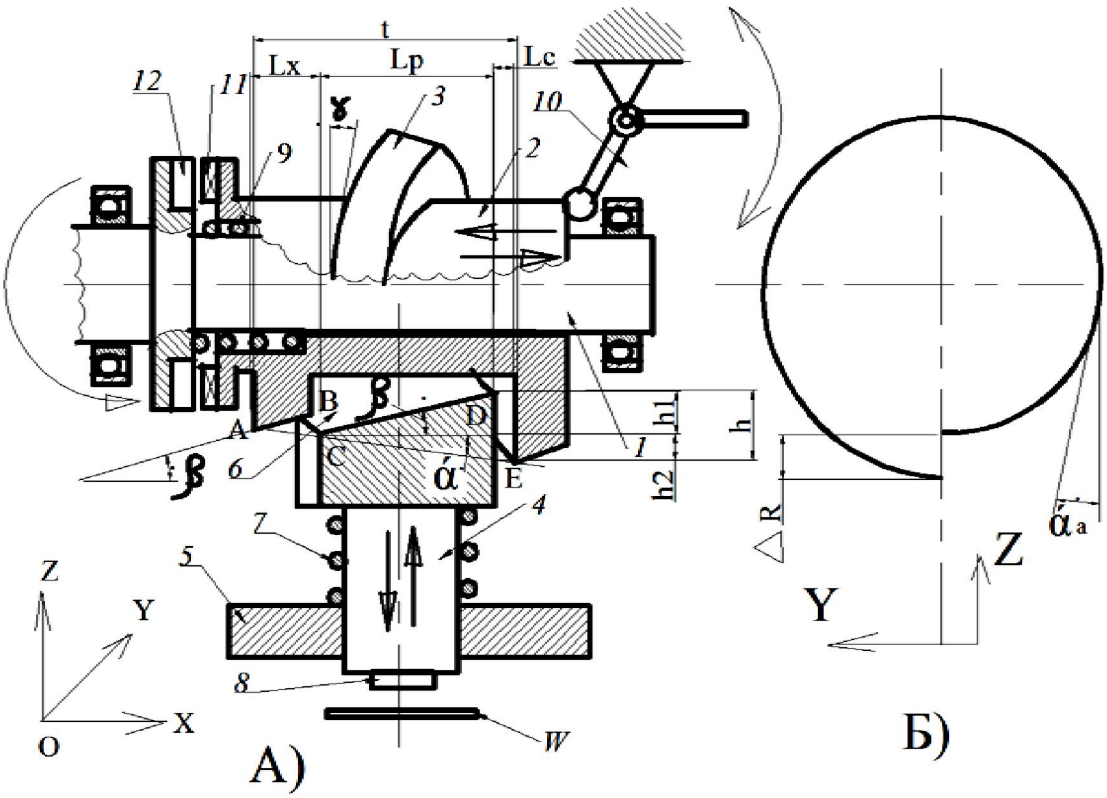

Figure 1 – Scheme of a cam-screw press

It is important to ensure a specific pressure on the working parts that does not exceed the permissible in order to create a working press with a sufficient force. As it was already mentioned, the recommended cam-screw press has a sufficiently large contact spot in the mating links. In [15, 16], we offer formulas by which the shape and area of the contact spot can be determined. The type of the spot is shown in figure 2 by the shaded area. Figure 2 is taken from [15, 16].

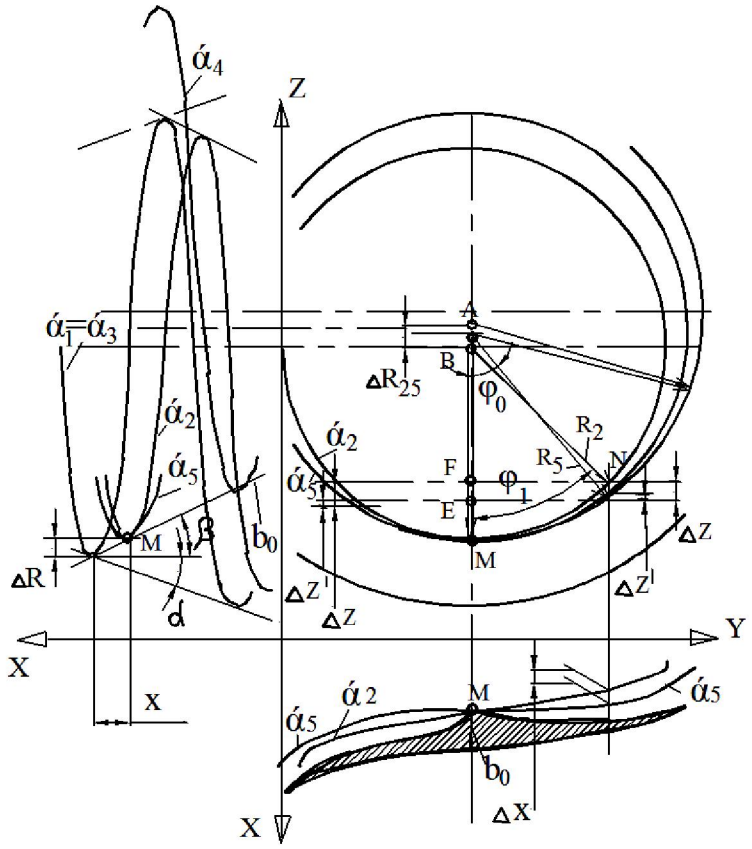

Figure 2 – A scheme for determining the shape of the contact patch; the contact patch shown by the shaded area

These formulas are not entirely suitable for practical calculations of the spot area. It is possible to offer a simplified formula which is simpler and which gives a result that is sufficiently appropriate for the practice. The contact spot can be regarded as an isosceles triangle whose area S is determined from the expression which is given below:

$$L = 2R\pi\frac{2\varphi}{360^{\circ}}$$

$$S = 0{,}75 \cdot B \cdot L \cdot 0{,}5 = 0{,}75 \cdot B \cdot L \cdot 0{,}5 \cdot 2R\pi\frac{2\varphi}{360^{\circ}} = 1{,}5BR\pi\frac{\varphi}{360^{\circ}}$$

B – the length of comb, mm (figure 3,4); R – average radius, mm; φ – angle, degree.

The following values of the design parameters are recommended for the press with the force of 400 kN:

$B = 60$ mm, $R = 200$ mm, $\varphi = 40^{0}$,S = 6283 mm^2

The specific normal stress is determined by the formula [17]:

$$\sigma = \frac{P}{S} = \frac{400000}{6283 \cdot 10^{-6}} = 63{,}66 \cdot 10^{6} \approx 64\ MPa$$

The maximum permissible normal stress for structural steel is not about 300 MPa [18]. The permissible voltage for normal long-term operation of the mechanism is not more than 65 MPa. As it can be seen, the normal stress in the press mechanism is less.

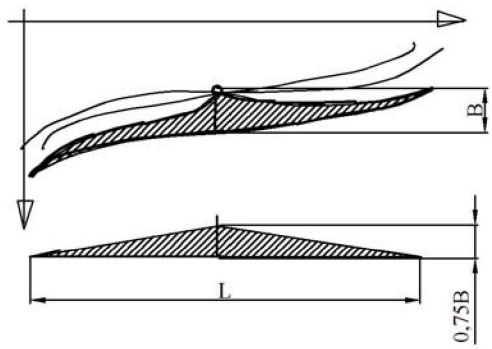

Figure 3 – Simplified form of contact patch

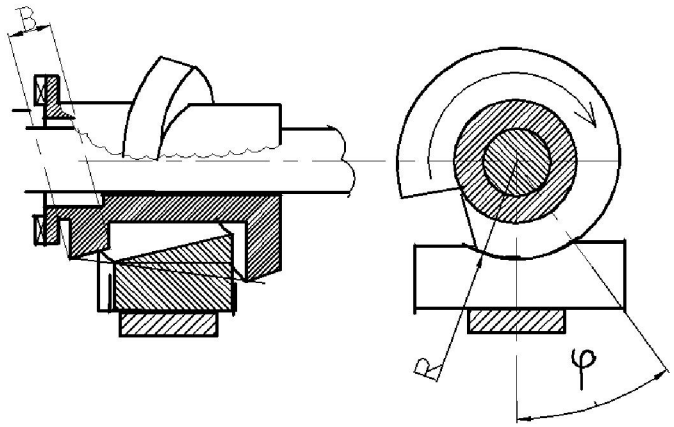

Figure 4 – A scheme for calculating the area of the contact patch

Let us determine the power of the press engine. In [15, 16], there is a formula for calculating the force of the press P_0:

$$P_0 = \frac{M \cdot \frac{h1}{h}}{(R_0 + \frac{t \cdot \mathrm{tg}\,\alpha \cdot \varphi i}{360^\circ}) \cdot \mathrm{tg}\,\gamma \cdot \mathrm{tg}(\beta + \psi)} + \frac{M \cdot \frac{h2}{h}}{(R_0 + \frac{t \cdot \mathrm{tg}\,\alpha \cdot \varphi i}{360^\circ}) \cdot \mathrm{tg}(\alpha_a + \psi)}$$

In this formula: $R_0 = \frac{t \cdot tg\alpha \cdot \varphi i}{360^\circ} = R_{cp}$ while $\varphi i = 180^\circ$, consequently, the formula can be simplified by the following way:

$$P_0 = \frac{M \cdot \frac{h1}{h}}{R_{av} \cdot \mathrm{tg}\,\gamma \cdot \mathrm{tg}(\beta + \psi)} + \frac{M \cdot \frac{h2}{h}}{R_{av} \cdot \mathrm{tg}(\alpha_a + \psi)}$$

where ψ – angle of friction, ψ=1,5°, angle of friction takes into account the friction between surfaces, thus the less friction, the smaller the angle

$$h1 = l_{px} \cdot tg\beta; h2 = l_{px} \cdot tg\alpha; h = h1 + h2$$

$$l_{px} = 0{,}9t$$

$$tg\gamma = \frac{t}{2\pi R_{av}}$$

$$tg\alpha_a \approx \frac{\Delta R}{2\pi R_{av}} = \frac{t \cdot tg\alpha}{2\pi R_{av}} \quad \text{(figure 1)}$$

R_{av} – average radius of Archimedes` spiral, $\Delta R$ - an increase in the radius of the Archimedes` spiral in one turn.

We take the following values for the press:

Engine power N=11 kW (11000 W), rotation frequency of n_e=750 min^{-1}, ψ=1,5^0; α=9^0; β=7^0, R_{av}=200 mm, t=155 mm. Rotation frequency of the press shaft n=100 min^{-1}.

The torque on the shaft of the press is equal to:

$$M = \frac{N}{\omega} = \frac{N}{0{,}1n} = \frac{11000}{0{,}1 \cdot 100} = 1100\ Hм$$

Angle γ

$$tg\gamma = \frac{t}{2\pi R_{av}} = \frac{155}{2 \cdot 3{,}14 \cdot 200} = 0.123$$

γ=7°

$$h1 = l_{px} \cdot tg\beta = 0{,}9t \cdot tg\beta = 17{,}13\ mm$$

$$h2 = l_{px} \cdot tg\alpha = 0{,}9t \cdot tg\alpha = 22{,}1\ mm$$

$$h = h2 + h1 = 39{,}23\ mm$$

$$tg\alpha_a \approx \frac{\Delta R}{2\pi R_{av}} = \frac{t \cdot tg\alpha}{2\pi R_{av}} = \frac{155 \cdot 0{,}158}{2 \cdot 3{,}14 \cdot 200} = 0.0195$$

α_a=1,1^o

$$P_0 = \frac{M \cdot \frac{h1}{h}}{R_{av} \cdot \mathrm{tg}\,\gamma \cdot \mathrm{tg}(\beta + \psi)} + \frac{M \cdot \frac{h2}{h}}{R_{av} \cdot \mathrm{tg}(\alpha_a + \psi)} = \frac{1100 \cdot \frac{17{,}13}{39{,}23}}{0{,}2 \cdot 0{,}12 \cdot 0{,}15} + \frac{1100 \cdot \frac{22{,}1}{39{,}23}}{0{,}2 \cdot 0{,}046} = 198019\ H$$

The rated force of the press is P_0=198019 H. Due to the inertial force of the flywheel, it is able to develop a force of up to 400,000 H. The rated force is half of the nominal stroke of the slider h = 39 mm.

For comparison, the KD2126 series of the crank press with a nominal effortP_1=400000 H has an engine with a power of N_1=4700 Wand a main shaft speed of n_1=100 min^{-1}, with a stroke of 10 mm, the crank length r = 5 mm [19]; according to the calculation, the force P_{1P}=94000 Hcan be developed, that is less than a quarter of the declared nominal effort.

$$P_{1P} = \frac{N_1}{0{,}1 \cdot n_1 \cdot r} = \frac{4700}{0{,}1 \cdot 100 \cdot 0{,}005} = 94000\ H$$

Results and discussions. Based on the presented calculations, the following parameters of the press design are proposed with a nominal force of 400 kN (table).

Parameters of the press design

#	Name	Unit of measurement	Value
1	Nominal effort	kN	400
2	Estimated effort	kN	198
3	Electric motor power	W	11000
4	Rotational speed of the press shaft	min^{-1}	100
5	Slider stroke	mm	39
Geometrical parameters of the cam-screw surface			
6	Average radius	mm	200
7	Step	mm	155
8	Length of comb	mm	60
9	Angleα	degree	9
10	Angleβ	degree	7
11	Angleγ	degree	7

Figure 5 shows a slightly modified layout of the press. It is recommended to position the guide rollers 13 on the slider 4, which move freely vertically in the upper part of the carcass 5 in order to reduce the height of the press and simplify the manufacturing process. There are return springs 7 on the jacks 13. The pallets 14 are mounted to the bottom of the slider 4. This circuit has a lower height and it allows create a closed space around the cylinder 2, surfaces 3 and 6, a roller 13 that can be filled with an oil and which will significantly improve the working conditions of the parts of the press.

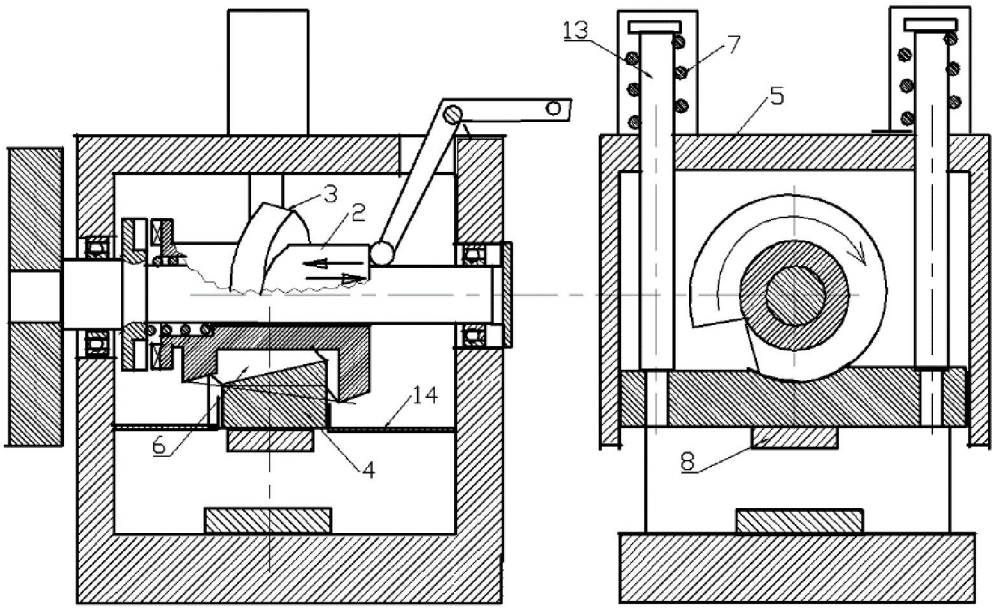

Figure 5 – Scheme of press with a reduced height

Figure 6 shows the main assembly of the press while figure 7 illustrates a general view of a section with the main structural dimensions. It is recommended to use an electromagnetic coil 5 for closing the cam clutch 4.

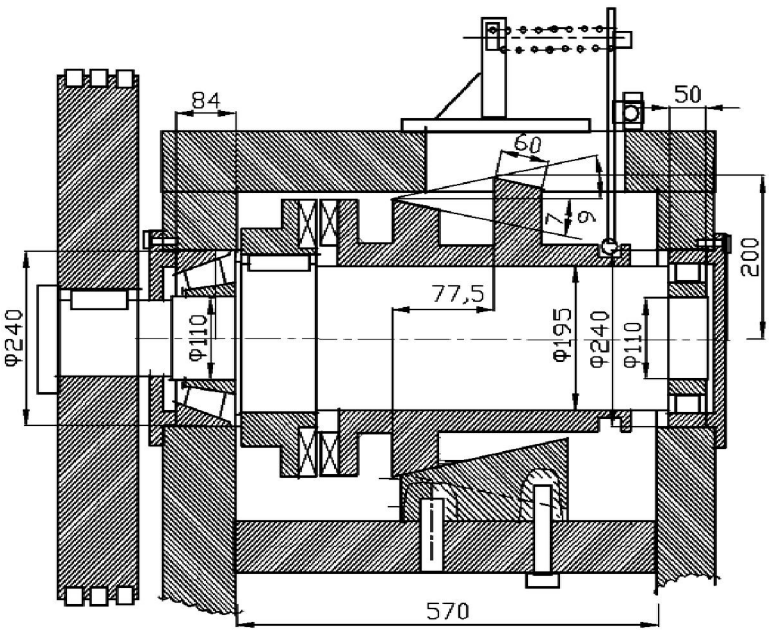

Figure 6 – The main press unit with a force of 400 kN

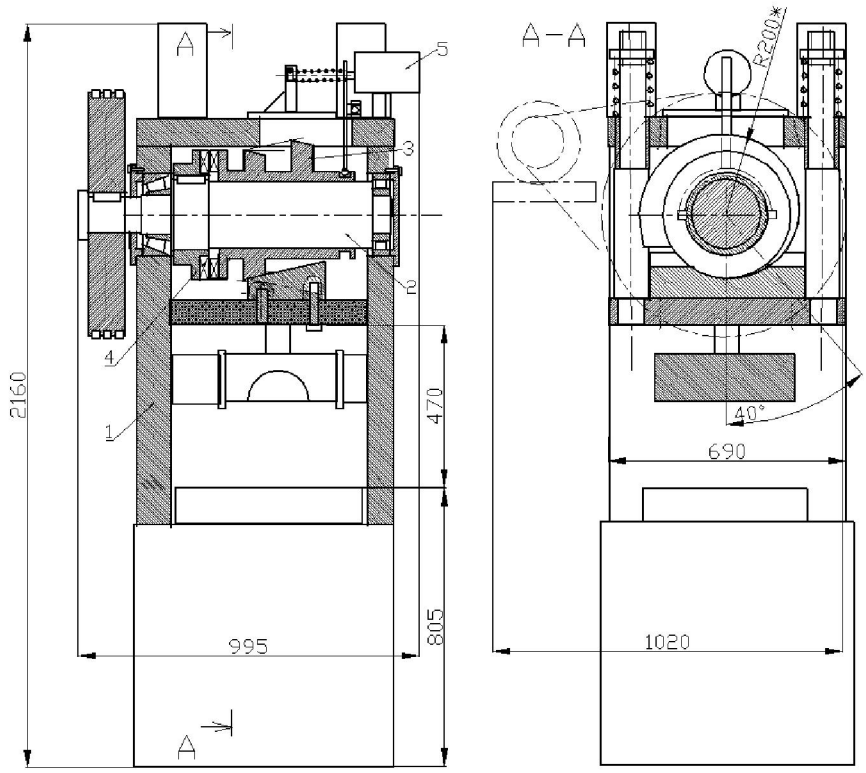

Figure 7 – General view of the press: 1 - corpus, 2 - shaft, 3 - cam-helical surface, 4 - cam clutch, 5 - electromagnetic coil.

Dimensions of the press 995x1020x2160 mm.For comparing the dimensions of the existing press KD2126–1330x1380x2680 [19]. As it can be seen, the proposed press is much smaller than the existing one; its height is less by 520 mm or by 19%. While designing the workshops, the height of the building`s span is assigned to the height of the highest equipment required for installation [20]. Thus, a large press height can significantly increase the costs for constructing the workshops and transporting the equipment.

Conclusions: The calculations of the main parameters of a cam-screw press with a force of 400 kN have been performed, the main design of the parameters and dimensions have been obtained. The layouts of the press as well as the location of all its main components and details have been worked out. The recommended design of the press is differed by its simplicity and reliability, the height of the press is reduced by 19% compared to the existing press model KD2126.

REFERENCES

[1] Taloverov V.N., Titov Yu.A. Equipment of the forge-press shops (Mechanical and hydraulic presses: research methods): Textbook / Ed. Yu.N., Berleta. Ulyanovsk: UlSTU, 2001. 80 p. ISBN: 5-89146-252-4.

[2] Minakov A.P., Kamchitskaya I.D., Ilyushina Ye.V. Design and production of blanks: textbook / Under the Soc. Ed. prof. A. P. Minakova. Mogilev: Belorussia.-Rus. Univ., 2017. 326 p. ISBN 978-985-492-178-5.

[3] Kasyanova O.V., Teryaeva T.N. Hydraulic presses: methodical instructions for laboratory work on the discipline “Basics of designing and equipping the polymer processing plants”. Kemerovo: SU Kuzbass State Technical University, 2011.

[4] Bocharov Yu.A. Screw presses. M.: Mechanical Engineering, 1976. 247 p.

[5] Bocharov Yu.A. Forging-stamping equipment: a textbook for students of higher educational institutions. M.: "Academy" Publishing Center, 2008. 480 p. ISBN 978-5-7695-3746-2.

[6] Wang L., Feng-Yu X., Xing-Song W. Analysis of thermally induced machine tool errors of a crank press. Proc IMechE Part B: J Engineering Manufacture 226(9).

[7] Zhivov L.I. Forging-stamping equipment: a textbook for universities / L.I. Zhivov, A.G. Ovchinnikov, Ye.N. Skladchikov; Ed. L.I. Zhivova. M.: Publishing house of MSTU named after N.E. Bauman, 2006. 560 p. ISBN 5-7038-2804-X.

[8] Yousong S., Jianguo H., Hongbo Z., Jiping H., Ya F., Weiping R. Energy Saving Drive for Forming Equipments. Advanced Materials Research. Vol. 154-155 (2011). P. 701-707.

[9] Ray R.I., Monyatovsky S.S. Forging-stamping equipment. Crank presses. Lugansk, 2000. 216 p. ISBN 966-590-094-3.

[10] Dennis C. Stamping 101: Anatomy of a Mechanical Press. Stamping Journal. 2008.

[11] Zahálka M., Staněk J. Options of Advanced Simulations of Crank Presses Loading. 25th DAAAM International Symposium on Intelligent Manufacturing and Automation, 2014.

[12] Svistunov V.E. Forging-stamping equipment. Crank presses: teaching aid. M.: MSIU, 2008. 697 p. ISBN 978-5-2760-1589-7.

[13] "Mechanical Press of Askarov". Patent of the RK № 2627.

[14] "Cam-screw mechanism". Preliminary patent of the RK №3380.

[15] Askarov E.S. Mechanical press on the basis of a cam mechanism with an increased contact patch // Bulletin of Mechanical Engineering. M., 2003. N 12. P. 3-11.

[16] Askarov E.S., Zhauyt A., Abilkaiyr Zh.N., Zhankeldi A.Zh, Naurushev B.K. (2017) A new type cam-screw mechanical press. 16th International Scientific Conference Engineering for Rural Development; Jelgava; Latvia. P. 36-41.

[17] Agamirov L.V. Resistance of materials: Short course. For university students. M.: LTD Publishing House «AST», Publishing House «Astrel», 2003. 256 p. ISBN 5-17-016164-6 (Publishing House «AST»), ISBN 5-271-05429-2 (Publishing House «Astrel»).

[18] Feshchenko V.N. Designer Reference. Book 1. Machines and mechanisms: a teaching aid. M.: Infra-Engineering, 2016. 400 p. ISBN 978-5-9729-0084-8.

[19] LLC Rubicon. Illustrated catalogs, directories, databases on metal-cutting machines and press-forging equipment, URL:http://stanki-katalog.ru/sprav_kd2126.htm (application date 01.02.2018).

[20] Maksimenko A.Ye. Designing the workshops for sheet and volume stamping: a textbook. MIUU RIC, 2008. ISBN: 978-5-2760-1456-2.

Е. С. Аскаров[1], Ә. Ж. Жанкелді[1], Б. Н. Абсадыков[2], Г. А. Смаилова[3]

[1]Қ. И. Сәтбаев атындағы Қазақ ұлттық техникалық техникалық университеті, Алматы, Қазақстан,
[2]Ә. Б. Бектұров атындағы химия ғылымдары институты, Алматы, Қазақстан,
[3]Қазақ ұлттық аграрлық университеті, Алматы, Қазақстан

ҮЛКЕН КҮШІ БАР ЖҰДЫРЫҚШАЛЫ-БҰРАМАЛЫ ПРЕССТІҢ КОНСТРУКТИВТІ ЕРЕКШЕЛІКТЕРІ

Аннотация. Қазіргі заманда машинажасау өндірілетін өнімнің 30% үлесімен әлемдегі өндірістің басты салаларының бірі болып табылады. Басқа салаларды технологиялық жабдықтармен қамтамасыз ету машинажасаудың басты мақсаты болып табылады. Ұсталық-қалыптау жабдықтарының құрамына кіретін пресстік жабдықтарды қолдану арқылы аз материал шығыны мен жоғары механикалық қасиеттері бар сериялық және массалық тетіктер өндірісін қамтамасыз етеді. Ұзақ тарихы және мыңдаған ғалымдардың осы салада жұмыс жасауына қарамастан пресстік жабдықтардың кемшіліктері бар, әсіресе, қосиінді прессте. Көптеген жұмыстар бар кемшіліктерді қосиінді пресстің механизмін өзгертпестен іске асырылуда. Авторлар жаңа конструкциялы механикалық прессті ұсынады.

Осы мақала металды қысыммен өңдеу, оның ішінде механикалық пресстер саласына жатады. Жұмыста жұдырықшалы-бұрамалы типті түпкі механикалық пресстің конструкциясы қарастырылған, 400 кН қысу күші бар пресстің негізгі конструктивті көрсеткіштерінің есептеулері берілген. Пресстің жұмыс жасау принципі көрсетілген. Мақалада жұдырықшалы-бұрамалы пресстің негізгі көрсеткіштерінің есептеулері қарастырылған. Негізгі тораптарының орналасуы бар пресстің құрастырылымы көрсетілген. Қосиінді аналогымен салыстырғанда пресстің биіктігі 19% азайтылған. Жаңа пресстің конструкциясы қосиінді аналогынан оңай және сенімдірек.

Түйін сөздер: механикалық пресс, жұдырықшалы-бұрамалы пресс, қосиінді пресс, металды қысыммен өңдеу.

Е. С. Аскаров[1], А. Ж. Жанкелди[1], Б. Н. Абсадыков[2], Г. А. Смаилова[3]

[1]Казахский национальный исследовательский технический университет им. К. И. Сатпаева, Алматы, Казахстан,
[2]Институт химических наук им. А.Б. Бектурова, Алматы, Казахстан,
[3]Казахский национальный аграрный университет, Алматы, Казахстан

КОНСТРУКТИВНЫЕ ОСОБЕННОСТИ КУЛАЧКОВО-ВИНТОВОГО ПРЕССА С БОЛЬШИМ УСИЛИЕМ

Аннотация. В настоящее время машиностроение является одним из главных отраслей в мировой промышленности с долей около 30% от всей производимой продукции. Обеспечение других отраслей технологическим оборудованием для продуктивной работы является главной задачей машиностроения. Серийное и массовое производство деталей с наименьшими потерями материалов и с высокими механическими свойствами обеспечиваются путем применения прессового оборудования, входящего в состав кузнечно-штамповочного оборудования. Несмотря на длинную историю существования, работу тысяч ученых в этой области, у прессового оборудования имеются проблемы, особенно у кривошипного пресса. Много работы ведется по исправлению существующих недостатков, без изменения схемы механизма кривошипного пресса. Авторы предлагают принципиально новую конструкцию механического пресса.

Данная статья относится к области обработки металлов давлением, в частности, к механическим прессам. В работе рассмотрена конструкция оригинального механического пресса кулачково-винтового типа, даны расчеты основных конструктивных параметров пресса усилием 400 кН. Показан принцип работы пресса. Рассматриваются расчеты основных параметров кулачково-винтового пресса. Показана компоновка пресса с расположением основных узлов. Высота пресса уменьшена на 19% по сравнению с аналогичным кривошипным. Конструкция нового пресса проще и надежнее кривошипного аналога.

Ключевые слова: механический пресс, кулачково-винтовой пресс, кривошипный пресс, обработка металлов давлением.

Information about the authors:

Askarov E. – Kazakh National Research Technical University after K. I. Satpayev, Almaty, Kazakhstan; erlan57@mail.ru; https://orcid.org/0000-0003-4487-4458

Zhankeldi A. – Kazakh National Research Technical University after K. I. Satpayev, Almaty, Kazakhstan; adilet.zhankeldi@gmail.com; https://orcid.org/0000-0002-8174-4209

Absadykov B. – Institute of Chemical Sciences named after A. B. Bekturov, Almaty, Kazakhstan; b_absadykov@mail.ru; https://orcid.org/0000-0001-7829-0958

Smailova G. – Kazakh national agrarian university, Almaty, Kazakhstan; smailova.g@kaznau.kz; https://orcid.org/0000-0003-2293-623