N E W S
OF THE NATIONAL ACADEMY OF SCIENCES OF THE REPUBLIC OF KAZAKHSTAN
SERIES OF GEOLOGY AND TECHNICAL SCIENCES
ISSN 2224-5278
Volume 4, Number 424 (2017), 98 – 107

UDC 621.771.26.001

S. A. Mashekov[1], B. N. Absadykov[2], A. E. Nurtazayev[1], A. S. Mashekova[1], E. Z. Nugman[1], M. L. Rakhmatullin[1], A. I. Polechuk[1]

[1]Kazakh National Research Technical University named after K. I. Satpayev, Almaty, Kazakhstan,
[2]Kazakh-British technical university, Almaty, Kazakhstam.
E-mail: mashekov.1957@mail.ru, b_absadykov@mail.ru, adilghan@mail.ru, mashekovaaigerim@mail.ru, nugman79@mail.ru, maksimka_-86@mail.ru, dron_2483@mail.ru

COMPUTER MODELLING OF THE STRIPS ROLLING PROCESS IN THE LONGITUDINAL-WEDGE MILL AND CALCULATION OF IT HEAVY-DUTY ELEMENTS DURABILITY

Abstract. A multifunctional longitudinal-wedge mill (LWM) of new design is presented. Analysis of the results of mathematical modeling of stress-strain state (SSS) ofthe rolling workpiece and stands of new mill is shown. The mathematical modelling was conducted by the finite element method and by the deformational model of the metal durability.The effect of the multifunctional LWM working rollsdiameterchangeson the SSS of the rolling strips and heavy duty elements of the mill stands was defined. It is shown that new mill has a sufficiently high rigidity of stands design and satisfy the strength requirements. It is noted that rolling strips on the proposed mill does not lead to the longitudinal and transverse gages interference of the finished steel. As a result ofSSS modelling of heavy-duty elements of new mill stands the measures for their modernization have been developed.
Keywords: mill; rolls; strain-stress state; gage interference; flatness.

Introduction. Current development of the rolling production is mainly aimed to improve quality of the rolling strips by assimilation and adaptation of new technique and technology into the production, which provide minimal transverse gage interference and flatness [1]. This is due to the fact that at the moment the production of high-quality copper strips and sheets with a thickness of less than 1 mm, aluminum stripes less than 0.5 mm thick, rolling of precious metals for obtaining billets of the jewelry and electrical industries, etc. is in demand [2].

In recent years, to produce strips with a given thickness, profile, flatness the modern rolling equipment or new designs of the standsare used [1, 3]. Therefore, leading metallurgical and engineering companies modernize and create new rolling equipment, at the same time they improve technological process of rolling. For example, new by design six-roll stands, quarto stands with intermediate rolls, multi-roll stands, etc. allow to regulate the profiles of the roll gap. However, many mills have not found wide application in the production, because of their complexity.

It is well known [4-8] that widely developed methods for regulating the transversal thickness and flatness of the rolled strips are: profiling of the rolls body, regulating thermal convexity, roll-bending of working and supporting rolls, reducing vibration during rolling, regulating the drafting regime of rolling strips, etc. However, the methods listed have drawbacks [4]. For example, the profiling of rolls is appli-

cable only for bands of a certain size. Thermal regulation has a significant inertia. The use of working and supporting rolls bending results in increase of the load on the bearings of the rolls unit and intensive wear of the rolls body.

Besides current trends in the development of specialized equipment for cold rolling sheets and tapes suggest the maximum possible simplification of the structure of rolling mills with simultaneous improvement of the quality of finished metal products [2].In this case, it is necessary to ensure the maximum flexibility of rolling process setup. One of the main requirements for the development of new equipment is the possibility of upgrading existing rolling mills stands to minimize costs.

On the other hand, at the moment many enterprises, that produce thin bands of metals and alloys, tend to purchase new equipment with a specific design [2, 5]. Consequently, due to very high complexity or the impossibility of their manufacture by third parties, spare parts and component sare purchased from the same manufacturer at a relatively high price. Therefore, in this aspect, development of the specialized cold and hot rolling mills is very rampant.

The main technological scheme for the industrial production of cold-rolled or hot-rolled sheets is the process of individual coils rolling of relatively thin strands and strips on the continuous or reversible mills, with the following their slitting along the length and width by the aggregate of longitudinal and transverse cutting [2].

However, in most cases, when rolling strips of non-ferrous, precious and precious metals, specialized mills are used [2]. These mills are limited by the volume of production of finished metal. Therefore, when rolling in these mills, it is difficult to use the original individual coils rolling. Whereas, individual coils rolling has a higher degree of adaptability when producing small batches of bands of different sizes for thickness, length and width. It can be concluded that this method effective for the use in the above-mentioned mills. At the same time, by eliminating the need to use rather complicated winding-tensioning devices and systems of kinematic synchronization of their drives, it is possible to simplify the composition and design of the rolling mill.

The simplest way to improve the quality of the rolled metal is to reduce the diameter of the working rolls, which leads to a reduction in the rolling force, which has a favorable effect on the final product [2,5]. But, often, the diameter reduction of the working rolls is impossible or limited due to the structural features of the frame of the rolling mill stand, also diameter reduction of the rolls leads to increase of roll deflection and decrease of rolling nodes strength. Small diameter of the working rolls can be achieved by using large diameter of the supporting rolls. Such way was exploited in the design of quarto and multi-roll stands of cold rolling mills. However, there are some reasons to study, when the size of the working roll decreased till the values that do not allow using working rolls as driving wheel sand the drive is organized on the supporting rolls.

One of the reason is the lack of the support of the working rolls along the rolling axis. For example, in the multi-rolls stands, and this is the reason of rolls bending in the horizontal plane, which negatively affects the quality of the finished product [2]. Another reason is the presence of a buoyancy force due to the fact that the circumferential force directed along the rolling line acts on the working roll from the transmitted moment. In addition, in interest the process of transferring the torque through friction between the rolls, which leads to loss of torque to friction and thus imposes a certain limitation on the possibility of organizing rolling with drive on the support rolls.

In order to eliminate the above problems and obtain high-quality sheets, as well as to reduce the energy-strength parameters, we propose a multifunctional LWM of a new design for rolling thin strips of steels and alloys (Figure 1) [9].

The aim of the work is to consider the possibility of calculating the SSS of the rolls, as one of the heavy-duty parts of multifunctional LWM by the use of developed algorithms.

Equipment, materials and method of the experiment. For rolling thin strips with accurate geometrical dimensions, we developed a new multifunctional five-stand LWM with simple design (Figure 1).

Multifunctional LWM for rolling sheets of steel and alloy contains: motors, gearboxes, gear cage, universal spindles, couplings, stands with working and back-up rolls (Figure 1). At this there are two and four back up rolls in the first three stands and in the last two stands respectively. Rotation of the working rolls, which are decreased in the rolling direction, is carried out through the bearing cages by the five gear motors with angular velocity $\omega = \upsilon \cdot R$ (where υ- the rolling speed in each mill stand; R – the radius of the

work rolls in each mill stand). The distance between the stands are increased by the amount of forward flow, and distance adjustment between the work rolls is made by the uniform worm push mechanisms located above and below of the mill frame assembly and bearing cages.

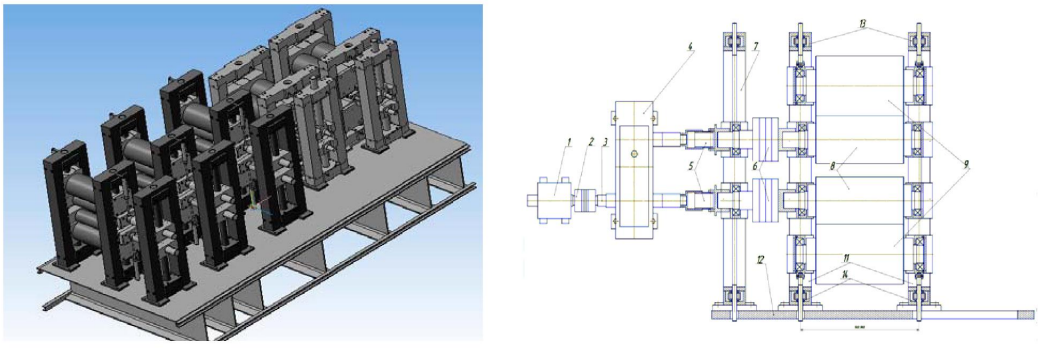

a *b*

Figure 1 – Multifunctional longitudinal-wedge mill (*a*) and construction of its working stands (*b*):
1 – gear motor; 2 – gear; 3 – lay shaft; 4 – pinion stand;5 and 6 – spindles; 7 – bearing stand; 8 – working rolls;
9 (first three stands) and 10 (last two stands, not shown) – support rolls; 11 – frame; 12 – shoe plate; 13 and 14 – push mechanism

It should be noted that working rolls in each stand have a constant diameter, and the diameter of the rolls in the sequentially arranged stands is reduced in the rolling direction. In output the thin strip is cut or reeled.

In the work MSC Nastran and MSC.Super Forgesoftware packages are used to solve the problem of elastoplastic by the finite element method in 3D formulation.

MSC.Super Forgesoftware package was used to calculate SSS of the work piece and energy-strength parameters of rolling thin strips. The proposed strips rolling process is complicated enough. It is connected with the fact, that during rolling the workpiece is deformed continuously in all 5 stands with the rolls, which have decreasing diameters in the direction of rolling.

Following steps were stuck to for modelling the research process by using MSC.SuperForge software package [10, 11]:

1) depending on the processing conditions, the type of finite-element analysis was chosen;

2) geometrical model of original workpiece, rolls and mills were created;

3) rheological properties of the workpiece were defined either by database of «MSC.SuperForge» software, or by thermomechanical properties of the workpiece material;

4) initial temperature of the rolling workpiece, as well as workpiece and rollcontact conditions on the surface, in other words, friction coefficient, the law of movement of the kinetic tool, were setup.

Further, components of the strain tensorε, components of strain rate tensor$\dot{\varepsilon}$, components of the stress tensorσ, intensity of deformation, stress intensity, power of a normal pressure, temperature distribution over the volume of the workpiece were calculated with a fairly rigid precision.

Results of calculations are presented in the form of field distribution of corresponding parameters along the volume of the deformed bode or in the form of numerical values of the studied parameters in the nodes of the deformed mesh.

In the work a 3Dgeometric model of the workpiece and of the rolls was constructed in the CAD Inventor program and then imported into CAE of MSC.SuperForge software. Volume element CTETRA (four nodes tetrahedron) was used to create a 3Dfinite element model of the workpiece and rolls. Time of calculation of the process was 30-40 minutes on a computer Pentium Duo with frequency of 3.4 GHz and 2 GB RAM.

For the research a rectangular billet of AD31 alloy in 3.5 mm thick and 400 mm wide was used. Rolling was carried out at a temperature of 250 °C on the LWM to a thickness of 0.7 mm. To simulate the plasticity of the workpiece material, elastoplastic model of Johnson-Cook was chosen. Rheological properties were set from MSC.SuperForge software system database.

Technical description of the proposed LWM working stands was used to calculate SSS. Material of the tool was 9X1 steel, which was assigned from a database. To do this, the density of the material and the thermal properties was set by the program as default. Contact between the roll and sheet was modeled by Coulomb friction. From the handbook [12] the coefficient of friction as 0.3 was appointed.

Temperature conditions during rolling consists of heat exchange between the roll, sheet and the environment, as well as a thermal effect due to metal deformation. Rolling process takes place at room temperature, so the start roll point taken equal to 20^0C.

PATRAN NASTRAN software of finite-element analysis was exploited for SSS and elastic deformation of the stands elements calculations [13, 14]. System of computer modelling PATRAN NASTRAN allows to study kinematics, dynamics of mechanisms with the possibility of calculating the stress-strain and thermal states as individual units, and the mill as a whole.

Following operations were made for construction of the working stands in PATRAN NASTRAN software [13, 14]: 1) creation of a 3D geometric model of every detail and assembling nodes of the working stands; 2) selection of the materials for the details, their mechanical and physical properties (modulus of elasticity, mass density, Poisson's ratio, tensile strength, etc.); 3) formation of the kinetically and statically boundary conditions; 4) SSS definition of the stands mill elements; 5) assessment of the level of obtained elastic deformations and stresses in the volume of each part of the stands on the required stiffness and strength criteria and introduction of relevant amendments to the mill construction (solid model of the mill).

The solid geometric shape of new mill design, the forces applied to them and the fixing conditions, as well as the conjugation conditions of the kinematic pairs of the stands construction are the initial data for the calculation.

The assembly 3D geometric model of the mill was developed in the CAD of COMPASS software, and by the means of built-in translator it was imported into the PATRAN NASTRAN with the adopted kinematic connections. This approach allows improving the connection between the stages of automated design of complex mechanisms. In order to automatically correct the geometry of the mill model, the method of parameterization of the geometric dimensions of the structure was used. This method allows to make appropriate changes in the construction of the stands of the new multifunction mill based on the results of strength calculation.

Six- and eight-nodes dimensional finite elements were exploited to simulate construction of new mill. In addition, twelve types of the stiffness were considered to define the main characteristics of the stiffness of the mill stands.

It has to be noted that the backup of the roll node of the stands was modelled in more detail. The computational model of each spherical roller bearing includes three types of components: an outer, an inner ring and two rows of rollers by 18 in each.

Stress state of heavy duty components of the stands was calculated by applying the rolling force and the effects of thermal stresses. Initial temperature of the rolls was equal to 20 ^{o}C.

Kinematic connection between the heavily loaded elements was simulated by the rotating and sliding kinematic pairs for the common surfaces of interface. At the same time the collision and friction in the rolls, pads, bearings, etc. was taken into account.

The interaction between the rigid supporting, working rolls and deformable workpiece material is simulated by means of contact surfaces that describe the contact conditions between the surfaces of the support and working rolls and also the surface of the thin sheet. In the process of modelling the contact conditions are constantly updated to reflect the rotation of the rolls, and the deformation of the material, which allows to simulate the sliding between the back-up and working rolls, as well as between workpiece material. At this in the analytical model linear contacts between the working and back up rolls were taken into account. Contact between the working rolls and a thin sheet is modelled by Coulomb friction with the coefficient of 0.5. In this case, the friction force between rolls taken equal to 0.0868.

It should be noted that the rolls were assembled on the supporting necks of the bearing box by three degrees of freedom T_x, T_y, T_z. The material of the rolls has been accepted 9X1 steel with the following mechanical properties: modulus of elasticity - 2.1+11 *Pa*; Poisson's ratio - 0.283; shear modulus - 8.1839+10 Pa. The materials for the other elements of the millare 40HS, St45, etc. with the respective mechanical properties.

Elastic constraints between the stand nodes were modeled by the spring – damper function CBUSH with the following properties: stiffness in movements - T_x, T_y, T_z - 1,E+10 N/m; stiffness in rotations - R_x, R_y, R_z - 1,E+8 N/m; coefficient of structural damping 0.04.

For calculations, the load schemes pointed in Table 1 were used.

The strength and rigidity of the working and supporting rolls of the multifunctional mill were investigated during strips hot rolling (rolling temperature 250 °C). Strips have been made from alloy AD31 with the size of 0.7 × 400 mm. As a starting stock, a tackle of thickness h_0 = 3.5 mm was used. Rolling was conducted by the rational regimes.

Table 1 – Load schemes

Stand	Contact pressure of the rolled strip on the working roll, acting in the direction of roll rotation axis, MPa	The tension pressure, acting in the direction of motion of the rolling strip, MPa	Deformation zone length, mm
1	119.701	16.5	8.992
2	134.555	17.6	8.07
3	115.304	17.42	5.92
4	148.501	16.35	3.93
5	122.421	14.25	2.3

Results and discussion

Calculation and analysis of the SSS show, that:

1) During rolling in the first stand of LWM the stress and strain intensity localize in the areas of metals capture by the rolls;

2) Increase of the draft leads to increase of the value of the stress and strain intensity in the center and along the edges of the deformed workpiece;

3) Deformation in the next stands of the LWM allow to gradually transfer zones of deformation massing from the surface areas to the central layers of the workpiece, and after uniformly deform the strip along the whole its length;

4) Uniform distribution of the stress and strain intensity by the mill stands leads to uniform distribution of shear strain intensity along the deformation zone;

5) The most uniform distribution of the cumulative distribution along the high and length of the rolled strip was got during rolling with the draft of 20% in the first stand, 20% in the second stand, 20% in the third stand, 15% in the fourth stand, 10% in the fifth stand;

6) During rolling in the stands of LWM the temperature rises in the zones of deformation localization, at this the metals parts with relatively high temperature move together with the deformation zone;

7) The maximum value of the contact pressure concentrates in the middle of the body roll length.

Conducted research showed, that during hot rolling of the strips made of AD31 alloy with the width of 400 mm, big values of equivalent stresses did not occur along the cross section of the strip (Figure 2). The maximum von Mises value equals to 127.3 MPa for the first stand, 211.9 MPa for the second stand, 106.6 MPa for the third stand, 124.9 MPa for the fourth stand, 123.6 MPa for the fifth stand. Meanwhile the maximum vales occur in the rolls necks of the mill. Calculated maximum values of the equivalent stresses do not exceed maximum allowed value of the stress limit for the 9X1 steel (880 MPa).

It has to be noted, that the proposed mill is supposed to use for hot rolling strips with the width of 600 mm (maximum) made of different steels, and also non-ferrous metals. This may lead to some decrease or increase of equivalent stresses along the cross-section of the rolls of multifunctional mill.

It has to be noted that the calculated values of the von Mises equivalent stresses do no exceed the upper level of the allowed contact-fatigue stresses. This means, that even small deviation of the technological process will not lead to the defects on the rolls surface: cracks, chipping, spalls.

The rotation of the working stands rolls through the bearing stand allows to position the spindles precisely horizontally, and the use of special design spindles made it possible to eliminate the horizontal displacement of working rolls. The above features of the projected mill enabled a low vibrational load to transmit the torques to the working rolls of mill stands. All this should contribute to obtaining bands with exact geometric dimensions.

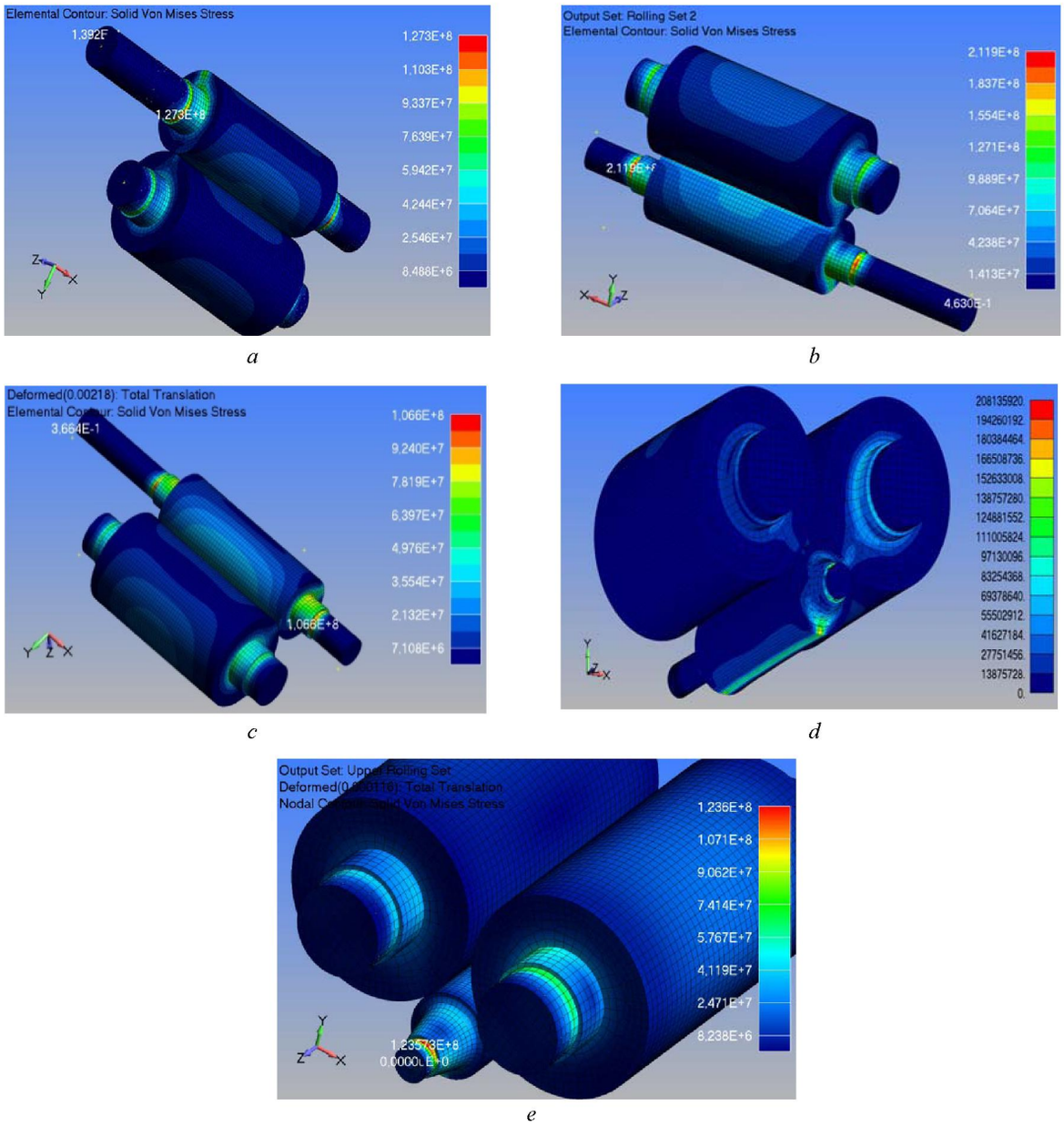

Figure 2 – The picture of von Mises stress distribution in the backup and working rolls in the first (*a*), second (*b*), third (*c*), fourth (*d*) and fifth (*e*) stands of the multifunctional mill

Under the action of the applied vertical forces (along the Y axis), the rolls bend in the direction of the force action. In other words, the maximum forces occurring in the Y-axis direction lead to the appearance of maximum deflections in the same rolling direction. Therefore, the body and the neck of the rolls are elastically deformed in the vertical direction.

When rolling in the stands of LWM in the middle of the backup rolls body in the direction of the Y axis the maximum displacement occurs. The values are indicated in table 2.

Table 2 – The maximum values of displacement

Stands	1	2	3	4	5
In the middle of the backup rolls body, mm	0.000106	0.0002792	0.00006738	0.00003579	0.00006721
In the neck of the backup rolls, mm	0.00005351	0.0001275	0.00002573	0.00003161	0.00004161
In the body of the working rolls, mm	0.00009316	0.0002064	0.00005269	0.0002035	0.0001711
In the neck of the working rolls, mm	0.00006158	0.0001327	0.0000246	0.00009611	0.0001125

Small forces that occur in the direction of the rolling axis, i.e. X axis, lead to the appearance of small elastic movements of the rolls material in the same direction. Moreover, when rolling in the first, second, third stands of the proposed mill from the opposite side of the stands drive, the maximum displacement values appear at the edges of the backup rolls body, which are equal to 0.00002788 mm; 0.00006604 mm; 0.00001945 mm, respectively, while the same displacements occur in the necks of the corresponding backup rolls. The results of the calculation showed that when rolling in the first, second, third stands, the maximum value of lifts in the working rolls also arise from the opposite side of the stands drive of the mill. Their values for the body and neck of the working rolls of the first, second, third stands are respectively: 0.00002555 mm; 0.00006126 mm; 0.00002087 mm. It should be noted that when rolling in the fourth and fifth stands of the new mill, the maximum displacement occurs in the middle of the backup and working rolls body. In this case, the maximum displacement values for the working rolls body are: 0.0001251 mm; 0.00005497 mm, and for the neck of these rolls - 0.00008638 mm; 0.00004047 mm, respectively. The results of the calculation showed that the following maximum values of displacements appear in the supporting rolls body of the last marked stands, correspondingly: 0.00006695 mm; 0.00009568 mm. In this case, the following maximum values of displacements appear in the necks of the backup rolls of these stands, correspondingly: 0.00005204 mm; 0.00006797 mm.

Small forces, arising perpendicular to the rolling axis, i.e. Z axis, lead to the appearance of the elastic movements of the rolls material in the same direction. Moreover, when rolling in the fourth and fifth stands of the proposed mill from the opposite side of the stands drive, maximum values of displacements equal to 0.000003809 mm appear on the edges of the roll of the backup rolls; 0.000008941 mm, respectively, while the same movements occur in the necks of the corresponding backup rolls. The results of the calculation showed that when rolling in the fourth and fifth stands of the new mill, the maximum value of the movements in the working rolls also arise from the opposite side of the stands drive of the mill. Their values for the body and neck of the working rolls of the fourth and fifth stands are respectively: 0.00003221 mm; 0.000026555 mm. It should be noted that when rolling in the first, second and third stands of the new mill, maximum displacement occurs in the drums of backup and working rolls. In this case, the maximum displacement values for the backup rolls body are: 0.0004572 mm; 0,00127 mm; 0.0003196 mm, and for the neck of these rolls - 0.0005040 mm; 0.001413 mm; 0.0003587 mm, respectively. The results of the calculation showed that in the working rolls body of the last marked stands the following maximum values of displacement occur (correspondingly): 0.0004106 mm; 0.001160 mm; 0.000363 mm. Moreover, in the necks of working rolls of these stands, the following maximum values of displacement appear (correspondingly): 0.0003736 mm; 0.001064 mm; 0.0002715 mm. It should be noted that the elastic movements of the rolls material in the direction of Z axis during rolling in the stands with two backup rolls are definitely greater, compared to rolling in the stands with four backup rolls.

In general, the magnitude of the total displacement field of the elastic deformations of the backup and working rolls is small (Figure3). In this case, in the first three stands the maximum total displacement occurs in the backup rolls (first stand: 0.0005762 mm, second stand: 0.001631 mm, third stand: 0.0004185 mm), and in the last two stands - in the working rolls (fourth stand: 0.0000866 mm, fifth stand: 0.000116 mm). All this testifies to the relatively high rigidity of the working stands rolls node, which guarantees the transversal thickness and flatness of the rolled strips within the required tolerances.

Thus, the greatest for all working rolls of the mill stands are the movements along the rolling force action (along the Y axis). The displacements along the X and Z axes are almost equivalent. For backup rolls deformations along the Y and X axes are essential, whereas for the working rolls and bearings along the Y and Z axes.

When rolling thin strips in the stands of a new mill, due to the decrease in the length of the capture arc during the transition from the first to the last stand, the length of the deformation center decreases (see above). Such a decrease in the length of the deformation center gives an advantage to the proposed rolling process before the conventional rolling process. Advantages of the rolling process in the new mill are that the metal pressure on the working rolls significantly (from 2 to 10 times) decreases. This makes it possible to significantly reduce the elastic deflection, especially of the rolls of the last mill stands and, as a consequence, reduce the transverse thickness and improve the flatness of the rolled strips, as well as to reduce the metal capacity of the rolling equipment, when designing and launching rolling mills of a new design.

The initial results of the calculation showed that the rolls nodes have low rigidity in the horizontal plane in the projected LWM. This is due to the deficiency of the support in the mill stands, which excludes the movement of the working rolls in the horizontal plane, and also not horizontal arrangement of the mill drive spindles. As a result, even small gaps between bearings, cushions and window frames, caused by tolerances of landings and wear, lead to horizontal displacements of the vertical axial plane of the working rolls relative to the backup rolls, i.e. working rolls are in an unstable position, and their axes could be skewed. This leads to negative consequences: increased vibrations, axial forces arise in the roll node, and the size of the roll gap is subjected to unpredictable oscillations, which reduces the accuracy of rolling.

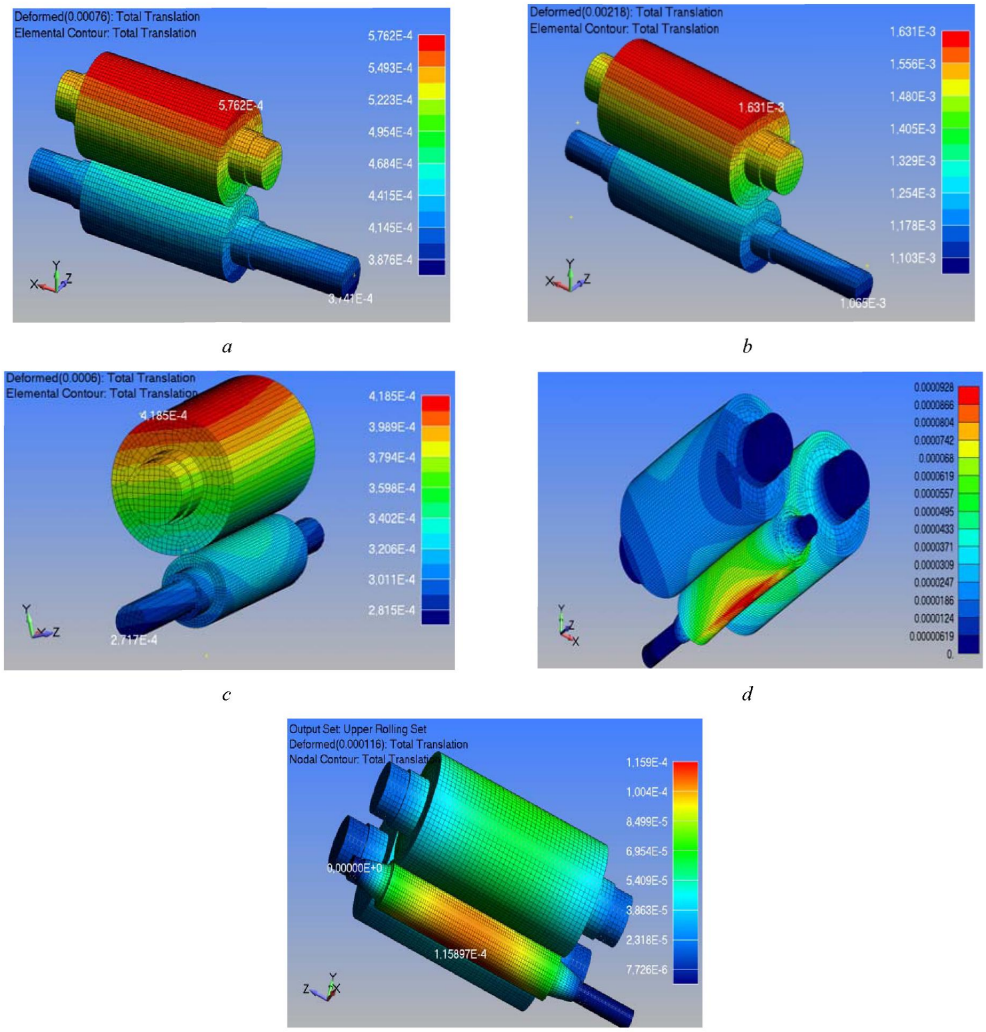

Figure 3 – The picture of the total displacement field of the elastic deformations distribution in the backup and working rolls in the first (*a*), second (*b*), third (*c*), fourth (*d*) and fifth (*e*) stands of the multifunctional mill

To eliminate these drawbacks, the design of the stands of the projected multifunctional mill has been adjusted. In the construction of mill stands, bearing stands and spindles of special design were added. The rotation of the rolls of working stands through bearing stands made it possible to position the spindles horizontally, and the use of spindles of a special design allows to eliminate the horizontal displacement of

working rolls. The above-mentioned changes in the design of the projected mill made it possible to transfer the torques to the working rolls of the mill stands without vibration loading. All this contributed to obtaining strips with exact geometric dimensions. In addition, it should be noted that the rotation of the rolls by five AC gear motors through five gear stands allows the rolling strips of steels and alloys with a minimum value of production noise.

Conclusion.

1. It is shown, that maximum values of the equivalent stress, arised in the rolls of the LWM, do not exceed the maximum allowed strength limit for the material of the rolls;
2. Based on the obtained results of simulation it was established that the value of the rolls deflection in each stand do not exceed allowed values;
3. It is defined that the value of elastic deformation of the rolls elements is not great, which certifies that the rolls node of new mill stands has high rigidity. This ensures that the cross-sectional thickness and flatness of the rolled strips are obtained within the required tolerances.

REFERENCES

[1] Maximov E.A. (2006) National Metallurgy. Equipment [Natsionalnaya metallurgiya. Oborudovanie]. 9: 45-51. (In Russian)

[2] Kulik A.N., Yurkov K.Yu., Faichak A.A., Shevchenko V.V. (2008) Protection of metallurgical machines from breakdowns [Zahist metalurgIynih mashin vid polomok] 10: 17-21(In Russian)

[3] Maximov E.A. (2010) Metal technology [Tehnologiya metallov] 9: 19 – 24 (In Russian)

[4] Maximov E.A. (2005) National Metallurgy. Equipment. [Natsionalnaya metallurgiya. Oborudovanie]1: 22-27 (In Russian)

[5] Mazur V.L., Nogovicyn A.V. (2010) Theory and technology of thin-sheet rolling (Numerical analysis and technical applications) [Teoriya i tehnologiya tonkolistovoy prokatki (Chislennyiy analiz i tehnicheskie prilozheniya)]. PBA "Dnipro-VAL", Ukraine. ISBN 978-966-8704-42-0 (In Russian)

[6] Maximov E.A. (2006) National Metallurgy. Equipment. [Natsionalnaya metallurgiya. Oborudovanie]11: 60 – 65 (In Russian)

[7] Lunev V.E., Shubin I.G., Rumyancev M.I. et al. (2003) Rolled Products [Proizvodstvo prokata] 6: 28 – 29 (In Russian)

[8] Braunshtein O.E. (2001) Analysis of the reasons for the differences in the thickness of sheets and the ways to eliminate it [Analiz prichin raznotolschinnosti listov i sposobyi eyo ustraneniya]. Herald of the mining and metallurgical section of the Russian Academy of Natural Sciences. Department of Metallurgy: Proceedings [Vestnik gorno-metallurgicheskoy sektsii RAEN. Otdelenie metallurgii : sb. nauch. tr.], Novokuznetsk, Russia. P. 94. (In Russian)

[9] Mashekov S.A., Nurtazaev A.E., Nugman E.Z., et al (2011) Continuous rolling mill of thin strips from steel and alloys [Nepreryivnyiy stan dlya prokatki tonkih polos iz stali i splavov]. Patent of the Republic of Kazakhstan [Patent Respubliki Kazakhstan]. (In Russian)

[10] Ivanov K.M., Shevchenko V.C., Yurgenson E.E. (2000) The finite element method in the technological problems of metal proceeding by pressure [Metod konechnyih elementov v tehnologicheskih zadachah OMD]. Institute of Mechanical Engineering, Russia. (In Russian)

[11] Soldatkin A., Golenkov Yu., et al (2000) CAD and Graphics [SAPR i grafika] 7: 11 – 13(In Russian)

[12] Kanavalov Y.V. (2008) The handbook of the roller. Manufacturing of hot-rolled sheets and strips [Spravochnik prokatchika. Proizvodstva goryachekatanyih listov i polos.], Heat Engineering [Teplotehnika], Russia.ISBN: 5-98457-060-2(In Russian)

[13] Kopanev D. (2010) Solution of the dynamics problems by means of MSC.Patran-Nastran. User guide[Reshenie zadach dinamiki sredstvami MSC.Patran-Nastran. Rukovodstvo polzovatelya], MSC.Software Corporation, Russia. (In Russian)

[14] Rybnikov E.K., Volodin S.V., Sobolev R.Yu. (2003) Engineering calculations of mechanical design in the MSC.Patran-Nastran system. Part I and II. User Guide [Reshenie zadach dinamiki sredstvami MSC.Patran-Nastran. Rukovodstvo polzovatelya], MSC.Software Corporation, Russia. (In Russian).

С. А. Машеков[1], Б. Н. Абсадыков[2], А. Е. Нуртазаев[1], А. С. Машекова[1], Е. З. Нугман[1], М. Л. Рахматуллин[1], А. И. Полещук[1]

[1]Қ. И. Сәтбаев атындағы Қазақ ұлттық техникалық университет, Алматы, Қазақстан,
[2]Қазақстан-Британ техникалық университеті, Алматы, Қазақстан,

БОЙЛЫҚ-СЫНАЛЫ ОРНАҚТА ЖОЛАҚТАРДЫ ИЛЕМДЕУ ПРОЦЕСІН КОМПЬЮТЕРДЕ МОДЕЛЬДЕП АСА АУЫР ЖҮКТЕЛГЕН ЭЛЕМЕНТЕРІНІҢ БЕРІКТІГІН ЕСЕПТЕУ

Аннотация. Мақалада құрылымы жаңа көпқызметті бойлық-сыналы орнақ ұсынылған. Шеткі элемент әдістемесін және металл беріктігінің деформациялық моделін қолданып, математикалық моделдеумен алынған жаңа орнақтың ауыр жүктелген элементерінің және илемделетін дайындаманың кернеулік-деформа-

циялық күйі мақалада талданып, нәтижесі көрсетілген. Көпқызметті бойлық-сыналы орнақ пішінбіліктері диаметрлерінің өзгеруі, илемделетін дайындаманың және орнақтың ауыр жүктелген элементтерінің кернеулі-деформациялы күйіне қалай әсер ететіндігі анықталған. Жаңа орнақтың қапасында жеткілікті дәрежеде қаттылық және айтылған қапастар беріктік шартын қанағаттандыратындығы жұмыста көрсетілген. Ұсынылып отырған орнақта жұқа жолақты жаймалаған кезде, олардың бойлық және көлденең бағыттарында алақалыңдық пайда болмайтындығы мақалада дәлелденген. Жаңа орнақ қапастарының ауыр жүктелгелген элементерін модельдеу нәтижесінде, оларды жаңғырту мәселесі шешілген.

Түйін сөздер: орнақ, пішінбілік, кернеулік-деформациялық күй, жұқа жолақ, алақалыңдық.

С. А. Машеков[1], Б. Н. Абсадыков[2], А. Е. Нуртазаев[1], А. С. Машекова[1], Е. З. Нугман[1], М. Л. Рахматуллин[1], А. И. Полещук[1]

[1]Казахский национальный исследовательский технический университет им. К. И. Сатпаева, Алматы, Казахстан,
[2]Казахстанско-Британский технический университет, Алматы, Казахстан

КОМПЬЮТЕРНОЕ МОДЕЛИРОВАНИЕ ПРОЦЕССА ПРОКАТКИ ПОЛОС В ПРОДОЛЬНО-КЛИНОВОМ СТАНЕ И РАСЧЕТ ПРОЧНОСТИ ЕГО ТЯЖЕЛОНАГРУЖЕННЫХ ЭЛЕМЕНТОВ

Аннотация. Предложен многофункциональный продольно-клиновый стан новой конструкции. Представлен анализ результатов математического моделирования напряженно-деформированного состояния (НДС) прокатываемой заготовки и клетей нового стана с использованием метода конечных элементов и деформационной модели прочности металла. Определено влияние изменения диаметра рабочих валков многофункционального продольно-клинового стана на НДС прокатываемых полос и тяжелонагруженных элементов клетей стана. Показано, что новый стан имеет достаточно высокую жесткость конструкции клетей и удовлетворяет условию прочности. Отмечено, что прокатка полос на предлагаемом стане не приведет к получению готового проката с продольной и поперечной разнотолщинностью. В результате моделирования НДС тяжелонагруженных элементов клетей нового стана разработаны мероприятия по их модернизации.

Ключевые слова: стан, валки, напряженно-деформированное состояние, разнотолщинность, планшетность.

Сведения об авторах:

Машеков С.А. – доктор технических наук, профессор, Казахский национальный исследовательский технический университет имени К.И. Сатпаева.

Абсадыков Б.Н. доктор технических наук, профессор, Казахстанско-Британский технический университет.

Нуртазаев А.Е. кандидат технических наук, доцент, Казахский национальный исследовательский технический университет имени К.И. Сатпаева.

Нугман Е.З. кандидат технических наук, доцент, Казахский национальный исследовательский технический университет имени К.И. Сатпаева.

Машекова А.С., Рахматуллин М.Л., Полещук А.И. PhD студенты, Казахский национальный исследовательский технический университет имени К.И. Сатпаева.