N E W S
OF THE NATIONAL ACADEMY OF SCIENCES OF THE REPUBLIC OF KAZAKHSTAN
SERIES OF GEOLOGY AND TECHNICAL SCIENCES
ISSN 2224-5278
Volume 2, Number 428 (2018), 63 – 71

UDC 622.2.433

M. T. Biletsky[1], B. T. Ratov[1], A. A. Kozhevnykov[2], A. R. Baiboz[3], D. N. Delikesheva[3]

[1]Caspian University, Almaty, Kazakhstan,
[2]State Higher Education Institution "National Mining University", Dnipro, Ukraine,
[3]NAO Kazakh National Research Technical University named after K. I. Satpayev, Almaty, Kazakhstan.
E-mail: biletsky@yandex.ru, ratov69@mail.ru, aak2@ua.fm, baiboztegi@gmail.com, delikesheva@mail.ru

UPDATING THE THEORETIC MODEL OF ROCK DESTRUCTION IN THE COURSE OF DRILLING

Abstract. Improvement of the rock destruction model during drilling with the aim of using it in the development of new types of crowns and bits and estimating the expected performance of their work.

The known model of vertical and horizontal displacements of the indenter over the rock surface is detailed with reference to the drilling of holes by crowns and bits of a cutting type in rocks with different physical and mechanical properties. Computer programs were developed that allow to calculate the work of the incisors using the methods of computational mathematics.

The choice of the type of the rock destruction model is substantiated with respect to drilling with a rock cutting tool and, in particular, with PDC bits. In accordance with the chosen model, an algorithm has been developed that makes it possible to perform specific calculations of the design parameters of crowns and bits and to estimate the expected performance of their work. An algorithm is developed for calculating the distribution of loads along the cutting edge of the bladed bits as a function of the distance from the axis of rotation. The design of a blade bit is proposed, which excludes its "hovering" in areas close to the axis of rotation, and a quantitative estimate of the expected effect is made.

The algorithm for achieving the above goal, developed by us, is original and, as far as we know, nowhere else published.

The algorithm developed by us can be used as the basis for creating a new rock-destroying tool. It allows to estimate in advance the possible effect of its application. With the help of this algorithm, the phenomenon of "hovering" of the bit in its central section was quantitatively evaluated and a method for eliminating this problem was proposed, which would provide a significant increase in the rates of the wells deepening.

Keywords: drilling wells, rock destruction, algorithm, computer model, rock destruction tool, designing, quantitative evaluation.

Introduction. Updating the existing technology must be based on the theory of processes considered. Availability of such a theory makes it possible:

- to find a most effective direction of the work;
- to anticipate a possible effect of the outputs;
- to evaluate the actual results and the extent of their approach to optimum;
- to find the cause of difference between the actual result and the expected one,;
- to find the ways of improvement.

Currently, two theoretical models [1] of rock destruction at drilling are prevalent.

Methods: ***The first model*** [2-4], considers drilling ascombination of two consecutive processes:

– the process of imbedding the assumedlyimmobile cutter into the well face;

– the process of spreading by rotation the destruction zone from the indentation cup all over the well face, removing the rock layer the indention cup thick.

The imbedding process is looked upon as the moreimportant and energy expending one, and as such is explored well enough [2-4]. The spreading over the well face process is considered an auxiliary one, 70–80 % of its energy expenditure being ascribed to the cutter's friction against the well face.

Our opinion is, that such a model can prove to be adequate on occasions, when in use is a drilling mode, consisting prevalently of imbeddings. It is the case with drilling with cone rock bits. Their cones in the course of rolling make their teeth alternatively plunge intoclosely situated sectors of the well face.

The similar situation takes place at rotary percussion drilling, where rock destruction is performed at the expense of impacts of cutters, while rotation only serves to uniformly distribute the impacts against a well face

It should also be pointed out, that the theory of the cutter rock imbedding is developed mostlywith relation to friableand friablyductilecrystalline rocks. With relation to ductile and porous formations (clays, loams, sandy clays etc.) the theory is not so well elaborated. However,now it is generally recognized [3, 4], that with anincrease of the well's depth under influence of the geostatic, and the hydrostatic pressures, the friably ductile rocks gradually turn into ductile ones.

What with the cutting type drilling with taking off a layer of rock by the moving along the well face cutter, – here the adequacy of the above-described model brings about serious doubts. It does not explain the reason, why once imbedded cutter during its displacement along the well face does not keep its initial depth, but continues penetrating. And it is just the penetrating in the course of "horizontal" movement, that represents the principal feature of the cutting type drilling.

An experienced driller, when resuming the interrupted drilling process, would never before starting rotation prop the bit against the well face to obtain maximum penetration. It may bring about breakage of the cutters to say the least. In fact, the rotation is started with no bit load (that is with no penetration) at all, and only after rotation starts the load and the penetration are gradually brought to the planned values

Currently, an active process of the cone rock bitsforcing out by the PDC bits is underway. The drilling by PDC bits belongs to cutting type drilling, for which the above model is inadequate.

The second model, developed by V. Vladislavlev [5], represents drilling as a combination of longitudinal and transverse displacements of the cutter. The idea being, that an imbedded cutter in the course of its movement along the well face is continuously leaving the compressed with the longitudinal load sector (impossible for further penetration). While displacing the opposing wall of the groove, the cutter comes over to the neighboring sector, not yet deformed and compressed. For that reason on the new sector under the same load, the cutter is gaining more penetration. The process is illustrated inthe figure 1 [5].

An indenter 1 with a flat end, which width is δ. is penetrating a ductile rock, which preserves the shape and dimensions of the imbedded part of the indenter. An assumption is made, that the indenter, while displaced by the value of δ, comes over from one position to another without time expenditures.

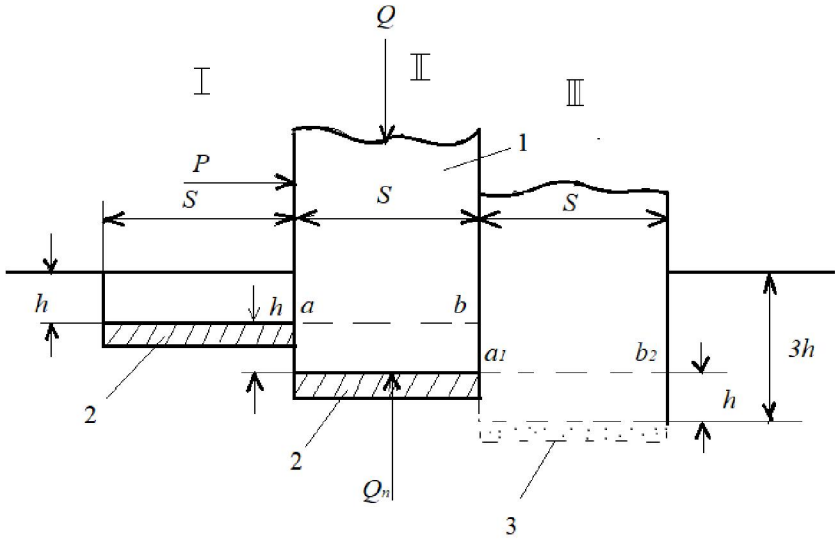

Figure 1 – A model of the indenter's penetrating, while moving along the well face