N E W S
OF THE NATIONAL ACADEMY OF SCIENCES OF THE REPUBLIC OF KAZAKHSTAN
SERIES CHEMISTRY AND TECHNOLOGY
ISSN 2224-5286
Volume 2, Number 428 (2018), 36 – 43

UDC 544.6:546.561 SRSTI31.15.33

R.N.Nurdillayeva[1], A.B.Bayeshov[2], G.S.Serik[1], A.K.Bayeshova[3]

[1]Khoja Akhmet Yassawi International Kazakh-Turkish University, Turkistan, Kazakhstan;
[2]Institute of Fuel, Catalysis and Electrochemistry of D.V. Sokolsky, Almaty, Kazakhstan;
[3]Al-Farabi Kazakh National University, Almaty, Kazakhstan
E-mail: raushan.nurdillayeva@ayu.edu.kz, bayeshov@mail.ru, gulzat.serik@ayu.edu.kz, azhar_b@bk.ru

PRODUCTION OF COPPER BROMIDE AT POLARIZATION BY AN ALTERNATING CURRENT

Abstract. The electrochemical method for the production of copper (I) bromide at polarization by an alternating current at 50 Hz frequency in the potassium bromide solution was developed for the first time. The effects of basic electrochemical parameters on the copper bromide formation were studied. The electrode pairs, "copper-copper" and "titanium-steel" electrodes in the two electrolysis, were connected to the electrochemical circuit and impulse current was obtained. It was shown that the copper bromide formation depends on the current density of the copper electrode in the first electrolysiscell and the current density of the titanium electrode in the second electrolysiscell. At the current density 800 A/m^{2}on the copper electrode and 60 kA/m^{2}onthe titanium electrode, the current efficiency of the copper bromide formation showed the highest value and accounted for 81% respectively. It was observed that when the concentration of potassium bromide solution is increased up to 2 mol/l, the current efficiency of the copper bromide formation increases, and it is decreased due to electrode surface passivation at higher concentrations. Increasing the solution temperature leads to the redissolution of the formed copper bromide, thereby to the decrease of the current efficiency value. It has been shown that as the alternating current increased, the current efficiency of the copper-bromide formation decreased, when the current frequency was 300 Hz, it showed the lowest value. Optimum values of electrolysis parameters were determined and the obtained copper (I) bromide content was identified by the X-ray phase analysis.

Keywords: copper bromide, alternating current, copper electrode, titanium electrode, current efficiency, electrolysis.

At present, alternating current (AC) electrolysis is of interest to many researchers in the field of electrochemistry due to the rapid development of electrochemical processes. Various forms of using AC allow to eliminate the electrode passivation and to intensify synthesis of many compounds [1].

Copper (I) bromide is a strong reductant that is widely used in chemical production, especially in the synthesis of organic matters. It acts as a catalyst in many organic reactions [2]. Brominating reactions and polymerization reactions of aromatic cycle compounds are carried out based on copper bromide [3-7].

Works [8-10] show that copper bromide forms coordination compounds with organic compounds and [11] presents the first results of the visualization of nanoparticles synthesis process at high speed by using the CuBr-laser.

Russian scientists I.P.Chernobayev, L.A.Kasatkina and V.G.Kolesnikova obtained copper bromide by electrolysis in the presence of the anodic current. They carried out their study based on the copper and graphite electrode in the presence of aqueous solution of the copper vitriol, potassium bromide and sulfuric acid. The disadvantage of this study is that the SO_2gas released as a result of electrolysis which is poisonous and causes discomfort for the study from the sanitary and hygienic point of view [12].

As previously reported, the electrochemical properties of copper in chloride, iodide, sulphate aquatic media were investigated and an electrochemical method of obtaining various copper compounds was

developed [13-16],and the electrochemical methods of synthesis of copper and zinc inorganic compounds were presented [17].

In our previous study we investigated the formation of copper bromide by polarizing copper electrode with anodic current and established the optimum conditions of electrolysis [18]. The current efficiency of the copper bromide formation reached 72%.

In this work, electrochemical production of copper bromide was carried out in the presence of the alternating current with a frequency of 50 Hz. The experiments for obtaining copper bromide were carried out in 100 ml thermostatic glass electrolysis. The second electrolysis cell was connected to the electrochemical circuit for impulse current transmission from the circuit. In the first electrolysis cell, two flat copper plates (S_{Cu}=0.0006 m^2) were placed and 2M KBr solution was used as an electrolyte. In the second electrolysis cell, a small titanium wire (S_{Ti}= 0.000006 m^2) and a large stainless steel (S_{SS} = 0.0015 m^2) were used as electrodes and 5% NaOH solution as electrolyte. It is known from literature [1] that a small titanium electrode is used as an additional electrode to produce impulse current of such frequency from the industrial alternating current of 50 Hz frequency. This method is typically used for synthesis of compounds by dissolving metals at polarization by an alternating current. It should be noted that the results of the preliminary study revealed that the copper electrode was dissolved to form copper bromide when performing the electrolysis by using the copper electrode and the titanium wire in 2M KBr solution with an alternating current, but at that time the titanium wire was agitated and caused difficulties in performing the electrolysis. In this regard, to avoid titanium agitation, the main copper electrodes in the first electrolysis cell were immersed in KBr solution, while the titanium wire in the second electrolysis were immersed in NaOH solution and connected to an AC source (Figure 1). After the electrolysis, the copper (I) bromide formed in the first electrolysis was filtered, rinsed with distilled water and absolute alcohol, dried and weighted by the weight method. The current efficiency value was calculated by the anodic half-cycle period of AC.

Preliminary studies have shown that the amount of the copper bromide formed in the first electrolysis cell directly depends on the current density of the copper electrode in this electrolysis cell and the current density of the titanium electrode in the second electrolysis cell. Therefore, the effect of the current density in these electrodes on the current efficiency of the copper bromide formation was comprehensively studied.

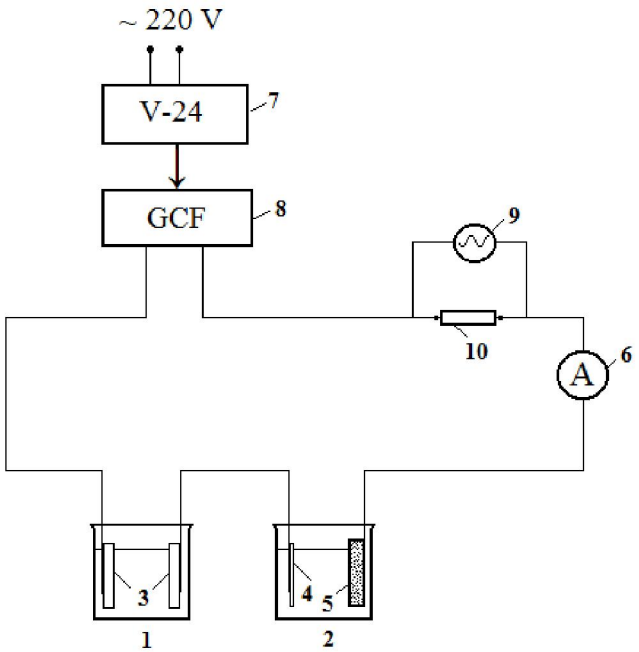

1 - first electrolysis cell; 2 - second electrolysis cell; 3 - copper electrodes; 4 - titanium electrode; 5 - stainless steel electrode; 6 - ammeter; 7 - alternating current source(V-24); 8 - AC frequency generator(GCF); 9 - oscillograph; 10 - resistance (1 Om).

Figure 1 - The principal scheme for the installation used for obtaining copper bromide by impulse current polarization

The effect of the current density on the titanium electrode polarized by an alternating current in the second electrolysis cell on the current efficiency of the copper (I) bromide formation was studied at the range of 20-120 kA/m^2. At this time, the current density of the copper electrodes polarized by an alternating current in the first electrolysis cell was kept constant (800 A/m^2). As a result of increasing the current density of the titanium electrode, the current efficiency of the copper bromide formation in the first electrolysis cell can firstly be increased and then decreased. At the current density in the titanium electrode 60 kA/m^2, the current efficiency reached the maximum value (81%). This can be explained by the formation of an oxide layer with semiconductor properties on the surface of the titanium electrode in anodic half-cycle period. This is due to the current density increase that the oxide layer on the surface of the titanium electrode is loose, its valve properties become weaker, and the alternating current is poorly formed in the circuit (Figure 2).

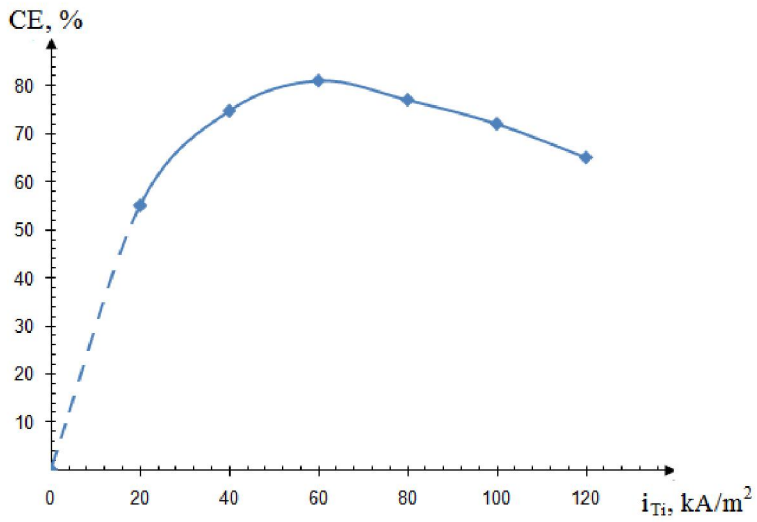

i_{Cu} = 800 A/m^2, [KBr] = 2 M, τ = 0.5 h, t = 20^{0}C, ν = 50 Hz.

Figure 2 - The effect of the current density in the titanium electrode on the dissolution of the copper electrode forming copper bromide at impulse current polarization

When the copper electrode is polarized by the production frequency alternating current, the following electrochemical reactions can take place during its anodic half-cycle period:

$$Cu^0 - e^- \leftrightarrow Cu^+ \qquad E^0 = +0.52\ V \qquad (1)$$

$$Cu^+ - e^- \leftrightarrow Cu^{2+} \qquad E^0 = +0.15\ V \qquad (2)$$

The results of the study have shown that single valence copper ions are stable in bromide solutions [19].

It is known that the solubility of copper (I) bromide is low (SP = 5.3·10^{-9}) [20, 21], so the formed Cu (I) ions are interconnected with Br$^-$ ions and copper (I) bromide is formed. It can be observed by the formation of orange sediment formed at the bottom of the solution:

$$Cu^+ + Br^- \rightarrow CuBr \downarrow \quad (3)$$

The effect of the current density in the copper electrode polarized by an alternating current on the current efficiency of the copper bromide formation was studied. The electrolysis of the copper electrode was performed at the current density of 200-1200 A/m^2; the current density increased up to 800 A/m^{2}and showed the highest value (81%). Further increase in the current density decreases the current efficiency. This is explained by the increase of the current density, the increase in the percentage of additional reactions and by the gradual passivation of the electrode after the formation of thin film of the copper bromide on the surface of the copper electrode (Figure 3).