N E W S
OF THE NATIONAL ACADEMY OF SCIENCES OF THE REPUBLIC OF KAZAKHSTAN
SERIES OF AGRICULTURAL SCIENCES
ISSN 2224-526X
Volume 4, Number 40 (2017), 76 – 82

UDC 631.354

A. Sh. Dzhamburshin, G. D. Turymbetova

Kazakh national agrarian university, Almaty, Kazakhstan.
E-mail: gulzuhra62@mail.ru

RESEARCH OF STRIPPER MECHANISMS FOR HARVESTING GRAIN CROPS IN KAZAKHSTAN

Abstract. This article describes harvest of crops by stripping heads. This allows us to radically change the harvester technology.

Key words: combine harvester, model, level use.

Annually about 2.5 billion tons of grain are produced in the world, 1.5 billion tonsof which are cereals, 720 million tons – wheat, and 490 million tons – rice. Grain production in Kazakhstan is one of the most profitable and export-oriented agricultural sectors. In record years Kazakhstan produced up to 34 mln tons, and currently produces from 16 to 20 mln tons. This providesus not only food, but also creates a stable livestock feed base that will enable to reduce imports of meat and dairy products. In general, for the countries that are major exporters of grain the production of 2 tons of grain per capita is considered to be the self-sufficiency level. In Soviet times, Kazakhstan met these criteria [1].

In addition, we should not lose sight of such specific area of Kazakhstan's grain production as rice cultivation. Annually, more than 50 quintals of rice per hectare on average are harvested, gross harvest amounts to 423 thou. tons of rice.

Therefore, for Kazakhstan, which is essentially the republic of grain, searching and implementation of effective technologies and facilities is a matter of food security and the competitiveness of the country's agricultural sector. What innovations doesthis sector have?

In XXI century, new machines and technologies of harvesting grain and tailings straw and chaff, as well as methods of deep processing of straw emerged. While the value of grain was obvious, straw and chaff were widely used. There is another equally important scope of application of straw, which is especially topical in Kazakhstan – it is leaving the long stubble on the field after stripping heads. In the United States, Canada and Australia, where "no-tilltechnology" is more widely used, the long stubble is very important. It facilitates both the accumulation of moisture and soil conservation against wind erosion [2].

Taking into account the fact that straw yield exceeds 1.5-3 times grain yield by weight you can imagine how much straw goes through threshing and separating units of a(grain)combine, mixing straw and grain, and then a lot of effort is put to separate them. Large power expended during combine harvesting is caused, first of all, by the energy of deformation of straw and the dimensions of combine are determined by the size of a straw walker and a screen-type separator, which separates wheat from the

chaff. This paradoxical process has always drawn the attention of engineers and inventors to the elimination of this obvious contradiction – "why to mow and mix grain and straw, which create a number of problems - crop losses, time and energy consumption – wouldn't it be more sensible to harvest them separately?". The question is obvious, but how to do that?

To solve this problem, we proposed a comb actuator with an active rotor (figure 1).

Its main working element is a rotor (figure 1) which consists of a pipe 1 which along the outside diameter chute boards 2 were evenly and radially mounted, which are rigidly connected to each other by a disk 3 coaxial to a rotor from one end.

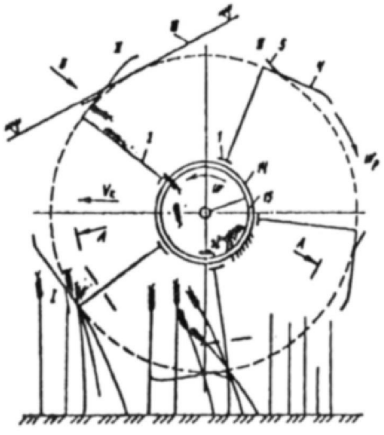

Figure 1 – A stripper machine for harvesting grain crops

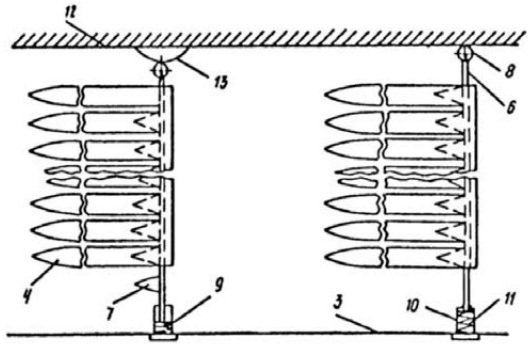

Figure 2

The device for collecting grain crops at the base works as follows: at the position I (Figure 2), the base of a comb 4 is at the level of height of heads of the highest plants. At the same time heads of plants with lower height,which fell into an operating zone of the comb earlier, are separated from their stalks, and some of them are even pulled with a stalk and a rootstock out of the soil, if the force required to pull heads from stalks is greater than the bonding strength between stalks and the soil having enough moisture. At this point, a roller 8, the axis of which rotates together with the rotor, rolls to a projection 13 mounted on a stationary disc 12 relative to the frame (Figure 2), and then a cutting unit starts, i.e. heads collected by a comb are separated from stalks, which are pulled out of the soil. After the roller 8 will roll off the ledge 13, a cutting blade under the action of a pressure spring 11 returns to its original state [3].

In the position II, the comb 4 interacts with a mechanism which cleans it. Entrapment of a wisp of heads cut between the cogs of the comb and separate tops of the individual weeds are pushed out of its slots and along the chute board 2 enter the corresponding window – slot, tube 1, which at this moment matches with the longitudinal profile on the cylinder 14. Thus, the collected mass of heads enters an operating zone of an auger conveyor 15 which removes it off the rotor, thus providing an opportunity to further supply of the mass to the threshing unit or a delivery cart.

Then the comb 4 reaches the position III in which the base of its chute board 2 passes completely the width of the longitudinal slot in the cylinder 14 and the comb cleaned from the mass is ready again to perform stripping heads, and the cycle repeats. Provided that the level of height of the rotor can be adjusted depending on the surface of the field, as well as the position of the projection 13 on the board 12 can be made on the move of the machine.

The radius of a rotor of the stripping machine is chosen according to the conditions of shock-free entry of a reel bar to standing crops and stripping all layers of heads from the minimum height - h_{min} to the maximum height - h_{max}. Given that the height distribution is subject to the normal law, we have:

$$R = \frac{V_M}{\omega} + 6\sigma_h^2$$

where V_M - the forward velocity of a machine, m/s; ω - the angular rate of a reel, sec^{-1}; σ_h^2 - dispersion of the height distribution of standing crops.

The reel height above the ground is determined by the following expression:

$$h_0 = h_{\min} + \frac{V_M}{\omega} + 6\sigma_h^2$$

The number of combs was chosen according to the conditions of stripping all standing crops along the run with no gaps (figure 3), i.e, a portion,being stripped by the comb should strictly follow the crop conditions, stripped by the previous comb. In the figure we see that the top "в" comes to the point B within $\frac{\pi}{2\omega}$.

The equations of motion of the front part and end of fingers are described as follows:

For the front part of fingers $\begin{cases} x_B = \sqrt{R^2 + L^2} \cdot \cos\omega \cdot t \\ y_B = V_M \cdot t + \sqrt{R^2 + L^2} \cdot \sin\omega \cdot t \end{cases}$

where R - the radius of a circle of the described finger; L_1 - the length of the finger of a comb.

For the end of fingers $\begin{cases} x_C = R\cos\cdot(\omega \cdot t - \gamma - \alpha) \\ y_C = V_M \cdot t + R\sin(\omega \cdot t - \gamma - \alpha) \end{cases}$

when $\gamma = arctg\frac{L_1}{R}$

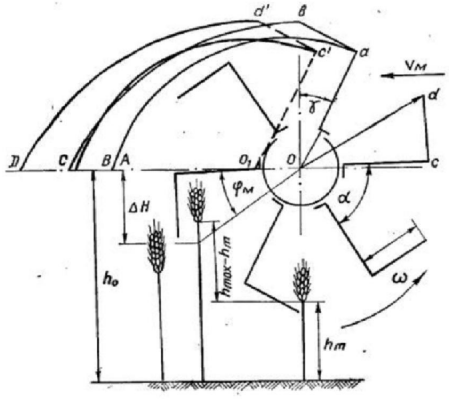

Figure 3 – For justification of the number of combs of a stripper header

Obviously, it is necessary to have the end of the following finger hit a passing point of the horizontal by the end of the previous one, i.e. $y_B = y_C$. From which the central angle per one comb will be equal to:

$$\alpha = \frac{\omega \cdot R}{V_M} \cdot \left(\frac{1}{\cos\gamma} - 1 \right) - \gamma .$$

The number of combs is determined by the following formula:

$$m = \frac{2\pi}{\alpha} = \frac{2\pi}{\frac{\omega R}{V_M}\left(\frac{\sqrt{R^2 + L_1^2}}{R} - 1 \right) - arctg\frac{L_1}{R}}$$