N E W S
OF THE NATIONAL ACADEMY OF SCIENCES OF THE REPUBLIC OF KAZAKHSTAN
SERIES OF GEOLOGY AND TECHNICAL SCIENCES
ISSN 2224-5278
Volume 2, Number 422 (2017), 194 – 200

UDC 62-83 (043)

Zh. Zh. Toigozhinova, E. B. Darkenbayeva

Almaty university of power engineering & telecommunications, Almaty, Kazakhstan.
E-mail: janar_tj@mail.ru, nur.elia11@mail.ru

SYNTHESIS OF PARAMETERS IN CLOSED-LOOP SYSTEM OF FREQUENCY CONVERTER – ASYNCHRONOUS MOTOR OF CENTRIFUGAL PUMP ON ECM

Abstract. This article presents a block diagram of the closed-loop electric drive system of frequency converter – asynchronous motor. We present a mathematical description of the dynamics of asynchronous electric drive movement and program of parameters synthesis of control system in MATLAB, as well as the schedule of transient processes of asynchronous motor. A program of parameters synthesis of control system of FC-AM closed-loop system in MATLAB was developed. Calculation of control parameters of the system, using the source data is conducted with developed software of differential equations solutions of the dynamics of the closed-loop frequency-controlled asynchronous electric drive. In a given block diagram of the system, the frequency converter – asynchronous motor with speed feedback to achieve the desired properties of the management processes, there was introduced a nonlinear correction as a regulator of the asynchronous motor speed. The calculated parameters of frequency converter and the non-linear correction system are selected according to the graphs of transient speed processes and electromagnetic torque of asynchronous motor in the MATLAB environment with the required quality characteristics of transient motor processes. The calculated unknown parameters of a closed-loop system frequency converter – asynchronous motor and the graph output of transient speed processes and electromagnetic motor torque on a computer display screen is carried out at the same time to facilitate the solution of the synthesis problem in a dialog work "operator – ECM" mode.

Keywords: frequency converter, asynchronous motor with short-circuit rotor, centrifugal pump, synthesis of parameters.

During the design of automatic control system of frequency-controlled asynchronous electric drive of centrifugal pump, the synthesis of control parameters is one of the necessary design tasks [1]. Synthesis of parameters of control system FC-AM is carried out on the basis of the block diagram of an asynchronous motor with short-circuit rotor [2]. Parameters of AKZ 20 HP (15 kW) asynchronous motor are selected from the SimPowerSystem library:

$$R_R = 0{,}2205\ Ом,\quad \mathrm{L_S} = L_R = 0{,}06518\ Гн,\quad \mathrm{L_m} = 0{,}06419\ Гн,\quad J = 0{,}102\,кгм^2,\quad p = 2.$$
$$U_{ДВ} = 400В,\quad f = 50Гц.$$

Table 1 – The coefficients necessary for the calculation of the parameters of the transfer functions of the asynchronous motor

Coefficients and constants of AM time	r ом	$T_S^{'}$ с	T_R с	k_R	$L_S^{'}$ Гн
Values	0,43	0,0046	0,296	0,985	0, 002

Parameters synthesis of asynchronous electric drive control is the most effective in the dialog mode of ECM use, when operator, having received the interim results of the account from the ECM, analyzes the received information and sends the further activity of the ECM. In this regard, the creation of program of

the parameters synthesis of the asynchronous electric drive control, which takes into account the dialog mode the operator – ECM, is one of the most popular design tasks of electrical drive systems control.

Figure 1 shows a block diagram of an asynchronous motor in the MATLAB system.

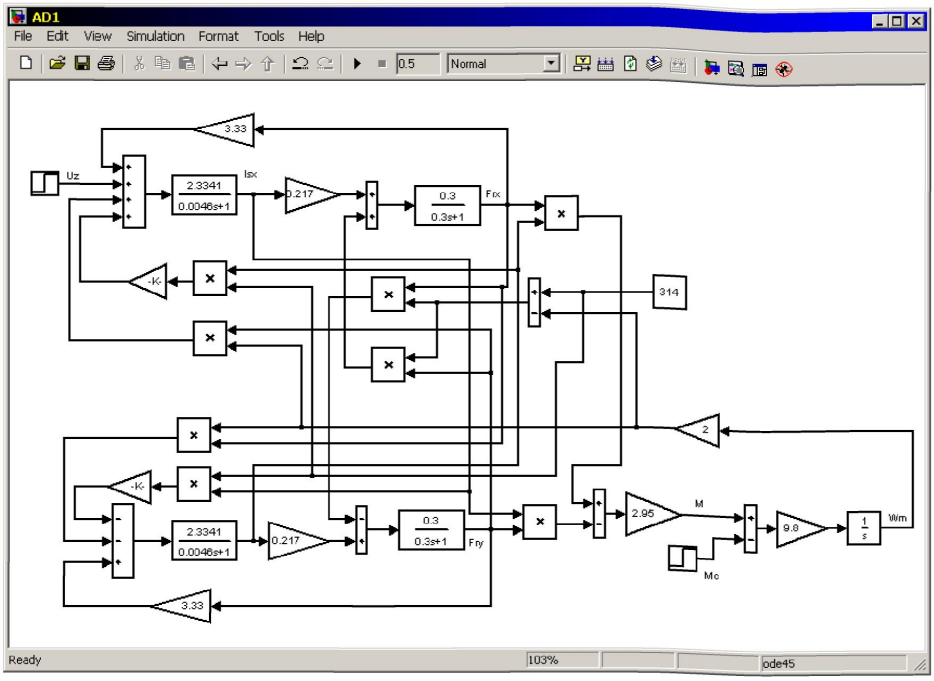

Figure 1 – Block diagram of an asynchronous motor with short-circuit rotor in the MATLAB system

The developed block diagram of the closed-loop system of the frequency converter – asynchronous motor with short-circuit rotor in a rotating coordinate system and with non-linear speed control is shown in Figure 2.

The automatic control system consists of: the speed controller (П – regulator) of an asynchronous motor, feedback on the motor speed, the total feedback from speed sensor and the voltage output U_{PR} from FC). In order to improve the quality characteristics of the transient process of dynamics of the drive closed-loop system of FC-AM to the control system there was introduced the non-linear correction unit with the dead zone.

In Figure 2, the block diagram of an asynchronous motor with AKZ 20NR (15 kW) short-circuit rotor was built with passport data and system parameters. The frequency converter (FC) in the block diagram is represented by an inertial element $K_{PR}/(T_{PR}p+1)$, where $T_{PR} = 0{,}001$ is according to the [3]. The speed controller of the closed-loop system frequency converter – asynchronous motor (FC-AM) is presented by non-linear filter with amplitude attenuation. The non-linear filter provides attenuation of the amplitude with increasing frequency without phase change, thus increasing the stability of the system. The non-linear filter consists of the following units: multiplier unit (multiplication unit), a unit with non-linear characteristics $|u|$; aperiodic unit with a transfer function W (p) = $K_{PC}/(T_{PC}p+1)$; unit with non-linear $sign(x)$ characteristics. Unknown parameters (subject to synthesis) are the numerical values of the nonlinear filter parameters, i.e. the numerical value of the K_{PC} coefficient, T_{PC} time constant. The coefficient of the K_{PR} frequency converter and the coefficient of K_{OC} feedback factor of the system should be defined. Mathematical description of asynchronous motor with short-circuit rotor (AKZ) in the rotating coordinate system, can be written by the following system of differential equations in the operator form:

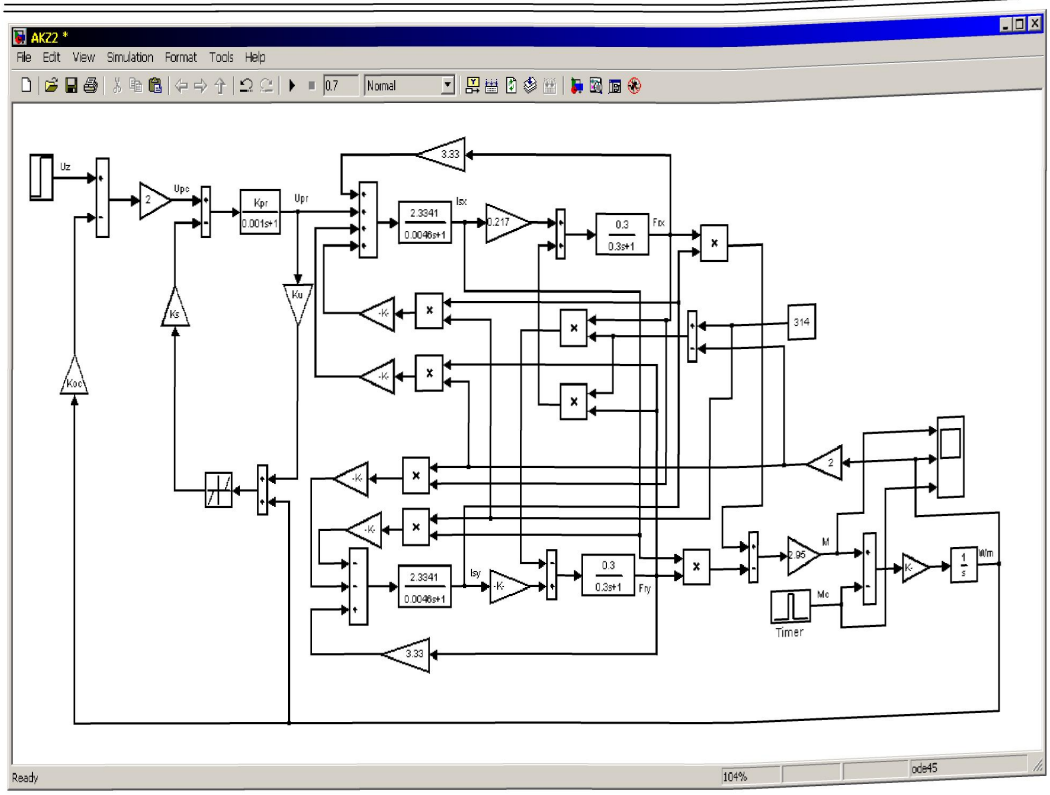

Figure 2 – Block diagram of the closed-loop system FC-AM

$$
\begin{aligned}
U_1 &= r(1+T_S^{'}s)i_{Sx} - \omega_1 L_S^{'} i_{Sy} - \frac{k_R}{T_R}\psi_{Rx} - k_R p\omega_m \psi_{Ry},\\
0 &= r(1+T_S^{'}s)i_{Sy} - \omega_1 L_S^{'} i_{Sx} - \frac{k_R}{T_R}\psi_{Ry} - k_R p\omega_m \psi_{Rx},\\
0 &= -k_R R_R i_{Sx} + \frac{1}{T_R}\psi_{Rx} + s\psi_{Rx} - (\omega_1 - p\omega_m)\psi_{Ry},\\
0 &= -k_R R_R i_{Sy} + \frac{1}{T_R}\psi_{Ry} + s\psi_{Ry} - (\omega_1 - p\omega_m)\psi_{Rx},\\
m &= 1.5pk_R(\psi_{Rx} i_{Sy} - \psi_{Ry} i_{Sx}), \quad Js\omega_m = M - M_H,
\end{aligned}
\tag{1}
$$

where $r = (R_S + k_R^2 R_R)$, $L^{'}_S = (L_S - \frac{L_m^2}{L_R})$, $k_R = \frac{L_m}{L_R}$, $T_R = \frac{L_R}{R_R}$.

The mathematical description of the dynamics of the closed-loop system FC-AM can be presented by the system of differential equations on the basis of the transfer functions of the system:

$$\frac{dx_1}{dt} = 0.217 * x(4) - 314 * x(2) + 2 * x(2) * x(5) - 3.33 * x(1);$$

$$\frac{dx_2}{dt} = 0.217 * x(3) - 314 * x(1) - 2 * x(1) * x(5) - 3.33 * x(2);$$

$$\frac{dx_3}{dt} = 506.5 * x(6) + 1686.7 * x(2) + 997{,}6 * x(1) * x(5) + 311.5 * x(4) - 217.4 * x(3);$$

$$\frac{dx_4}{dt} = 1686.7 * x(1) - 311.5 * x(3) - 997{,}6 * x(2) * x(5) - 217 * x(4);$$

$$\frac{dx_5}{dt} = 28.9 * x(2) * x(4) - 28.9 * x(1) * x(3);$$

$$\frac{dx_6}{dt} = (1000 * K_P * K_{PC}) * u - 1000 * (2 * K_P * K_{OC} + K_P K_S * g1) * x(1) -$$

$$- (1000 * K_P * K_S * g1 * K_U) * x(6);$$

$$\frac{dx_7}{dt} = 2.95 * ((x(2) * dx(4) + x(4) * dx(2)) - (x(1) * dx(3) + x(3) * dx(1))),$$

where $x_1 = \Psi_{RX}$, $x_2 = \Psi_{RY}$, $x_3 = i_{SX}$, $x_4 = i_{SY}$, $x_5 = \omega_m$. Ψ_{RX}, Ψ_{RY} – rotor flux linkage, i_{SX}, i_{SY} – stator current.

Parameters synthesis of control system of frequency regulated electric drive is carried out on the basis of the algorithm of parametric synthesis illustrated in Figure 3. The calculation procedure is as follows:

1. The initial data: coefficient of *Kp* frequency conversion, coefficient of K_{PC} speed, coefficient of the total voltage from the speed sensor and FC sensor K_S, coefficient of the voltage sensor of FC K_U, coefficient of the gain from the non-linear unit K_S, and coefficient of feedback on the speed K_{OC} are introduced. It should be noted that the initial values of the coefficients subject to the synthesis are set in the form of random numbers.
2. The condition of the inequality $x_i \le 1$ is checked.
3. Partial derivatives $S = f(x_i)$ are calculated.
4. The numerical values of the right side of the system of differential equations are calculated (1).
5. The minimum sum of Lyapunov function and its derivatives by scanning method is calculated.
6. New numerical values of the variables x_i are calculated.
7. The condition of the inequality $x_i \le 1$ is checked again.

In case of failure of inequality, the output of numerical values of the synthesized parameters (K_P, K_U, K_S, K_{OC} и K_{PC}) and output of graphics of transient speed and motor torque for the visual evaluation of the quality of transients is carried out. The synthesis program of control system parameters FC-AM, compiled on the MATLAB Algorithmic Language [4], is shown in Figure 4. We should note that the non-linear unit in the control system is presented on the basis of the method of harmonic linearization [5, 6], by the linear unit with harmonic linearization equal to g1 = 1,107. This coefficient of harmonic linearization is used with the same name g1 in the program of synthesis of control system parameters.

The program of parameters synthesis of the system control:

```
function SCAY;
global Kp; global Kpc; global Koc; global Ks; global Ku;
global s1; global s2; global s3; global s4; global s5;
global s6; global s7; global s8; global s9; global s10;
 n=6;  r=0; s1=0; s3=0; s5=0; s7=0; s9=0; m=50;
for i=1:m
  h=0.5; q1=1e6;
Kp=rand*20; Koc=rand^2; Ku=rand; Ks=rand; Kpc=rand;
x(6)=0.01;  while x(5)<=1
x(5)=0.01;  while x(5)<=1
x(4)=0.01;  while x(4)<=1
x(3)=0.01;  while x(3)<=1
x(2)=0.01;  while x(2)<=1
```