N E W S
OF THE NATIONAL ACADEMY OF SCIENCES OF THE REPUBLIC OF KAZAKHSTAN
SERIES OF GEOLOGY AND TECHNICAL SCIENCES
ISSN 2224-5278
Volume 4, Number 424 (2017), 98 – 107

UDC 621.771.26.001

S. A. Mashekov[1], B. N. Absadykov[2], A. E. Nurtazayev[1], A. S. Mashekova[1], E. Z. Nugman[1], M. L. Rakhmatullin[1], A. I. Polechuk[1]

[1]Kazakh National Research Technical University named after K. I. Satpayev, Almaty, Kazakhstan,
[2]Kazakh-British technical university, Almaty, Kazakhstam.
E-mail: mashekov.1957@mail.ru, b_absadykov@mail.ru, adilghan@mail.ru, mashekovaaigerim@mail.ru, nugman79@mail.ru, maksimka_-86@mail.ru, dron_2483@mail.ru

COMPUTER MODELLING OF THE STRIPS ROLLING PROCESS IN THE LONGITUDINAL-WEDGE MILL AND CALCULATION OF IT HEAVY-DUTY ELEMENTS DURABILITY

Abstract. A multifunctional longitudinal-wedge mill (LWM) of new design is presented. Analysis of the results of mathematical modeling of stress-strain state (SSS) ofthe rolling workpiece and stands of new mill is shown. The mathematical modelling was conducted by the finite element method and by the deformational model of the metal durability.The effect of the multifunctional LWM working rollsdiameterchangeson the SSS of the rolling strips and heavy duty elements of the mill stands was defined. It is shown that new mill has a sufficiently high rigidity of stands design and satisfy the strength requirements. It is noted that rolling strips on the proposed mill does not lead to the longitudinal and transverse gages interference of the finished steel. As a result ofSSS modelling of heavy-duty elements of new mill stands the measures for their modernization have been developed.
Keywords: mill; rolls; strain-stress state; gage interference; flatness.

Introduction. Current development of the rolling production is mainly aimed to improve quality of the rolling strips by assimilation and adaptation of new technique and technology into the production, which provide minimal transverse gage interference and flatness [1]. This is due to the fact that at the moment the production of high-quality copper strips and sheets with a thickness of less than 1 mm, aluminum stripes less than 0.5 mm thick, rolling of precious metals for obtaining billets of the jewelry and electrical industries, etc. is in demand [2].

In recent years, to produce strips with a given thickness, profile, flatness the modern rolling equipment or new designs of the standsare used [1, 3]. Therefore, leading metallurgical and engineering companies modernize and create new rolling equipment, at the same time they improve technological process of rolling. For example, new by design six-roll stands, quarto stands with intermediate rolls, multi-roll stands, etc. allow to regulate the profiles of the roll gap. However, many mills have not found wide application in the production, because of their complexity.

It is well known [4-8] that widely developed methods for regulating the transversal thickness and flatness of the rolled strips are: profiling of the rolls body, regulating thermal convexity, roll-bending of working and supporting rolls, reducing vibration during rolling, regulating the drafting regime of rolling strips, etc. However, the methods listed have drawbacks [4]. For example, the profiling of rolls is appli-

cable only for bands of a certain size. Thermal regulation has a significant inertia. The use of working and supporting rolls bending results in increase of the load on the bearings of the rolls unit and intensive wear of the rolls body.

Besides current trends in the development of specialized equipment for cold rolling sheets and tapes suggest the maximum possible simplification of the structure of rolling mills with simultaneous improvement of the quality of finished metal products [2].In this case, it is necessary to ensure the maximum flexibility of rolling process setup. One of the main requirements for the development of new equipment is the possibility of upgrading existing rolling mills stands to minimize costs.

On the other hand, at the moment many enterprises, that produce thin bands of metals and alloys, tend to purchase new equipment with a specific design [2, 5]. Consequently, due to very high complexity or the impossibility of their manufacture by third parties, spare parts and component sare purchased from the same manufacturer at a relatively high price. Therefore, in this aspect, development of the specialized cold and hot rolling mills is very rampant.

The main technological scheme for the industrial production of cold-rolled or hot-rolled sheets is the process of individual coils rolling of relatively thin strands and strips on the continuous or reversible mills, with the following their slitting along the length and width by the aggregate of longitudinal and transverse cutting [2].

However, in most cases, when rolling strips of non-ferrous, precious and precious metals, specialized mills are used [2]. These mills are limited by the volume of production of finished metal. Therefore, when rolling in these mills, it is difficult to use the original individual coils rolling. Whereas, individual coils rolling has a higher degree of adaptability when producing small batches of bands of different sizes for thickness, length and width. It can be concluded that this method effective for the use in the above-mentioned mills. At the same time, by eliminating the need to use rather complicated winding-tensioning devices and systems of kinematic synchronization of their drives, it is possible to simplify the composition and design of the rolling mill.

The simplest way to improve the quality of the rolled metal is to reduce the diameter of the working rolls, which leads to a reduction in the rolling force, which has a favorable effect on the final product [2,5]. But, often, the diameter reduction of the working rolls is impossible or limited due to the structural features of the frame of the rolling mill stand, also diameter reduction of the rolls leads to increase of roll deflection and decrease of rolling nodes strength. Small diameter of the working rolls can be achieved by using large diameter of the supporting rolls. Such way was exploited in the design of quarto and multi-roll stands of cold rolling mills. However, there are some reasons to study, when the size of the working roll decreased till the values that do not allow using working rolls as driving wheel sand the drive is organized on the supporting rolls.

One of the reason is the lack of the support of the working rolls along the rolling axis. For example, in the multi-rolls stands, and this is the reason of rolls bending in the horizontal plane, which negatively affects the quality of the finished product [2]. Another reason is the presence of a buoyancy force due to the fact that the circumferential force directed along the rolling line acts on the working roll from the transmitted moment. In addition, in interest the process of transferring the torque through friction between the rolls, which leads to loss of torque to friction and thus imposes a certain limitation on the possibility of organizing rolling with drive on the support rolls.

In order to eliminate the above problems and obtain high-quality sheets, as well as to reduce the energy-strength parameters, we propose a multifunctional LWM of a new design for rolling thin strips of steels and alloys (Figure 1) [9].

The aim of the work is to consider the possibility of calculating the SSS of the rolls, as one of the heavy-duty parts of multifunctional LWM by the use of developed algorithms.

Equipment, materials and method of the experiment. For rolling thin strips with accurate geometrical dimensions, we developed a new multifunctional five-stand LWM with simple design (Figure 1).

Multifunctional LWM for rolling sheets of steel and alloy contains: motors, gearboxes, gear cage, universal spindles, couplings, stands with working and back-up rolls (Figure 1). At this there are two and four back up rolls in the first three stands and in the last two stands respectively. Rotation of the working rolls, which are decreased in the rolling direction, is carried out through the bearing cages by the five gear motors with angular velocity $\omega = \upsilon \cdot R$ (where υ- the rolling speed in each mill stand; R – the radius of the

work rolls in each mill stand). The distance between the stands are increased by the amount of forward flow, and distance adjustment between the work rolls is made by the uniform worm push mechanisms located above and below of the mill frame assembly and bearing cages.

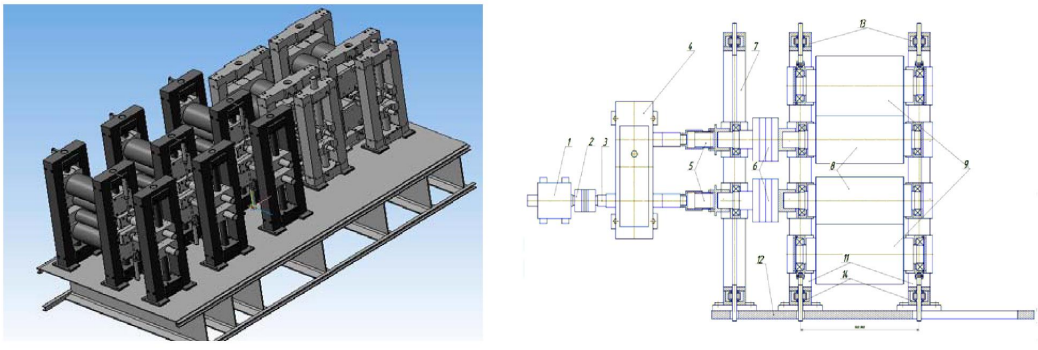

a *b*

Figure 1 – Multifunctional longitudinal-wedge mill (*a*) and construction of its working stands (*b*):
1 – gear motor; 2 – gear; 3 – lay shaft; 4 – pinion stand;5 and 6 – spindles; 7 – bearing stand; 8 – working rolls;
9 (first three stands) and 10 (last two stands, not shown) – support rolls; 11 – frame; 12 – shoe plate; 13 and 14 – push mechanism

It should be noted that working rolls in each stand have a constant diameter, and the diameter of the rolls in the sequentially arranged stands is reduced in the rolling direction. In output the thin strip is cut or reeled.

In the work MSC Nastran and MSC.Super Forgesoftware packages are used to solve the problem of elastoplastic by the finite element method in 3D formulation.

MSC.Super Forgesoftware package was used to calculate SSS of the work piece and energy-strength parameters of rolling thin strips. The proposed strips rolling process is complicated enough. It is connected with the fact, that during rolling the workpiece is deformed continuously in all 5 stands with the rolls, which have decreasing diameters in the direction of rolling.

Following steps were stuck to for modelling the research process by using MSC.SuperForge software package [10, 11]:

1) depending on the processing conditions, the type of finite-element analysis was chosen;

2) geometrical model of original workpiece, rolls and mills were created;

3) rheological properties of the workpiece were defined either by database of «MSC.SuperForge» software, or by thermomechanical properties of the workpiece material;

4) initial temperature of the rolling workpiece, as well as workpiece and rollcontact conditions on the surface, in other words, friction coefficient, the law of movement of the kinetic tool, were setup.

Further, components of the strain tensorε, components of strain rate tensor$\dot{\varepsilon}$, components of the stress tensorσ, intensity of deformation, stress intensity, power of a normal pressure, temperature distribution over the volume of the workpiece were calculated with a fairly rigid precision.

Results of calculations are presented in the form of field distribution of corresponding parameters along the volume of the deformed bode or in the form of numerical values of the studied parameters in the nodes of the deformed mesh.

In the work a 3Dgeometric model of the workpiece and of the rolls was constructed in the CAD Inventor program and then imported into CAE of MSC.SuperForge software. Volume element CTETRA (four nodes tetrahedron) was used to create a 3Dfinite element model of the workpiece and rolls. Time of calculation of the process was 30-40 minutes on a computer Pentium Duo with frequency of 3.4 GHz and 2 GB RAM.

For the research a rectangular billet of AD31 alloy in 3.5 mm thick and 400 mm wide was used. Rolling was carried out at a temperature of 250 °C on the LWM to a thickness of 0.7 mm. To simulate the plasticity of the workpiece material, elastoplastic model of Johnson-Cook was chosen. Rheological properties were set from MSC.SuperForge software system database.

Technical description of the proposed LWM working stands was used to calculate SSS. Material of the tool was 9X1 steel, which was assigned from a database. To do this, the density of the material and the thermal properties was set by the program as default. Contact between the roll and sheet was modeled by Coulomb friction. From the handbook [12] the coefficient of friction as 0.3 was appointed.

Temperature conditions during rolling consists of heat exchange between the roll, sheet and the environment, as well as a thermal effect due to metal deformation. Rolling process takes place at room temperature, so the start roll point taken equal to 20^0C.

PATRAN NASTRAN software of finite-element analysis was exploited for SSS and elastic deformation of the stands elements calculations [13, 14]. System of computer modelling PATRAN NASTRAN allows to study kinematics, dynamics of mechanisms with the possibility of calculating the stress-strain and thermal states as individual units, and the mill as a whole.

Following operations were made for construction of the working stands in PATRAN NASTRAN software [13, 14]: 1) creation of a 3D geometric model of every detail and assembling nodes of the working stands; 2) selection of the materials for the details, their mechanical and physical properties (modulus of elasticity, mass density, Poisson's ratio, tensile strength, etc.); 3) formation of the kinetically and statically boundary conditions; 4) SSS definition of the stands mill elements; 5) assessment of the level of obtained elastic deformations and stresses in the volume of each part of the stands on the required stiffness and strength criteria and introduction of relevant amendments to the mill construction (solid model of the mill).

The solid geometric shape of new mill design, the forces applied to them and the fixing conditions, as well as the conjugation conditions of the kinematic pairs of the stands construction are the initial data for the calculation.

The assembly 3D geometric model of the mill was developed in the CAD of COMPASS software, and by the means of built-in translator it was imported into the PATRAN NASTRAN with the adopted kinematic connections. This approach allows improving the connection between the stages of automated design of complex mechanisms. In order to automatically correct the geometry of the mill model, the method of parameterization of the geometric dimensions of the structure was used. This method allows to make appropriate changes in the construction of the stands of the new multifunction mill based on the results of strength calculation.

Six- and eight-nodes dimensional finite elements were exploited to simulate construction of new mill. In addition, twelve types of the stiffness were considered to define the main characteristics of the stiffness of the mill stands.

It has to be noted that the backup of the roll node of the stands was modelled in more detail. The computational model of each spherical roller bearing includes three types of components: an outer, an inner ring and two rows of rollers by 18 in each.

Stress state of heavy duty components of the stands was calculated by applying the rolling force and the effects of thermal stresses. Initial temperature of the rolls was equal to 20 ^{o}C.

Kinematic connection between the heavily loaded elements was simulated by the rotating and sliding kinematic pairs for the common surfaces of interface. At the same time the collision and friction in the rolls, pads, bearings, etc. was taken into account.

The interaction between the rigid supporting, working rolls and deformable workpiece material is simulated by means of contact surfaces that describe the contact conditions between the surfaces of the support and working rolls and also the surface of the thin sheet. In the process of modelling the contact conditions are constantly updated to reflect the rotation of the rolls, and the deformation of the material, which allows to simulate the sliding between the back-up and working rolls, as well as between workpiece material. At this in the analytical model linear contacts between the working and back up rolls were taken into account. Contact between the working rolls and a thin sheet is modelled by Coulomb friction with the coefficient of 0.5. In this case, the friction force between rolls taken equal to 0.0868.

It should be noted that the rolls were assembled on the supporting necks of the bearing box by three degrees of freedom T_x, T_y, T_z. The material of the rolls has been accepted 9X1 steel with the following mechanical properties: modulus of elasticity - 2.1+11 *Pa*; Poisson's ratio - 0.283; shear modulus - 8.1839+10 Pa. The materials for the other elements of the millare 40HS, St45, etc. with the respective mechanical properties.